boss door controls

DOOR CONTROLS
OVERHEAD DOOR CLOSERS

TS5.226 RACK & PINION DOOR CLOSER

INTRODUCTION

A robust, durable, and stylish EN 3-6 spring-adjustable overhead door closer with backcheck functionality. Perfect for heavy-duty applications requiring increased closing force, and commonly specified for outward-opening exterior doors.



FEATURES & FUNCTIONS

- Spring adjustable closing power size EN 3-6 door mount pull, EN 3-5 parallel arm mount
- UKCA & CE marked for door mount pull (Fig.1) applications and parallel arm mount (Fig.66)
- Suitable for doors up to 1400mm wide and 120kg
- Adjustable backcheck
- Adjustable closing speed and latch action
- Suitable for fire and non-fire door applications
- Slimline semi-radius cover with anti-rattle clips
- Optional hold-open armset (not to be used on fire doors)

CERTIFICATION

- CE Marked to EN 1154 (2812-CPR-AD5424)
- UKCA Marked to EN 1154 (1121-CPR-AD8023)
- Fire tested to EN 1634-1 for use on fire doors up to 120mins timber, and 240 minutes on fully insulated steel doors.
- Certifire Approved (CF689)
- Environmental Product Declaration in accordance with ISO 14025 and EN 15804
- 25 year guarantee
- DoP available at www.bossdoorcontrols.com/dop

Always refer to the certification page for up-to-date documentation

CE certifire

120 min TIMBER

EPD GUARANTEE 10 YEARS

Boss Door Controls
3 & 4 Rutherford Square, Brucefield Industry Park,
Livingston, EH54 9BU
T: +44 (0) 1506 467 477
E: boss.sales@allegion.com

ALLEGION

bossdoorcontrols.com

ISSUE DATE: October 2026

boss door controls

TS5.226 RACK & PINION DOOR CLOSER

PRODUCT FEATURES	PRODUCT REFERENCES
	TS5.226
Closer Type	projecting/scissor arm
Pull side door mount	■
Push side parallel arm mount	■
Closing power EN size (spring adjustable)	EN 3-6 door mount pull | EN 3-5 parallel arm mount
Maximum Door limits (width / weight)	1400mm / 120kg
Maximum angle of opening	180˚
Closing speed & latch action adjustment	■
Adjustable backcheck (Door mount pull Fig.1 only)	■
Mechanical hold-open facility	□
Matching arm & cover finish	■
Cover variant	Semi-radius
Finishes available (Additional RAL finishes on request)	SSS, SIL, PB, PSS, MB plus 7 metallic finishes
CE Classification (pull side door mount)	4 8 3-6 1 1 3
CE Classification (push side parallel arm mount)	3 8 3-5 1 1 3

■ Standard.

□ Available as an option/variant.

FINISHES

All finish variants are supplied with matching cover and slide channel assembly

Standard Finishes



Silver SIL | Satin Stainless SSS | Polished Stainless PSS | Polished Brass PB | Matt Black MB

Additional Metallic Finishes



Light Bronze BRZ-L | Mid Bronze BRZ-M | Dark Bronze BRZ-D | Matt Bronze BRZ-MATT | Satin Brass SB | Satin Copper COP-S | Antique Brass AB

For illustrative purposes only. Please refer to colour swatches.

Boss Door Controls
3 & 4 Rutherford Square, Brucefield Industry Park,
Livingston, EH54 9BU

T: +44 (0) 1506 467 477
E: boss.sales@allegion.com

ALLEGION

bossdoorcontrols.com

ISSUE DATE: October 2026

boss door controls

TS5.226 RACK & PINION DOOR CLOSER

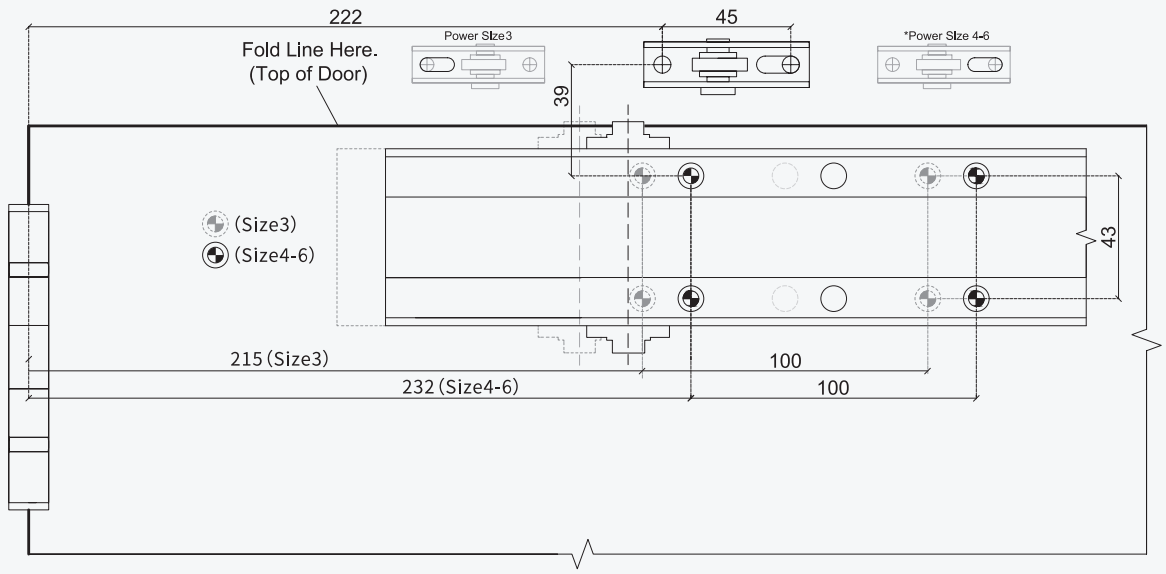

Dimensions in mm

TS5-226

FIG. 66 Right hand hung

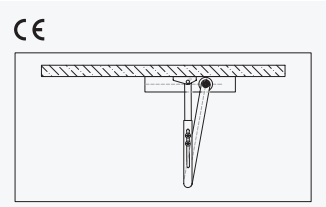

TS5-226

FIG. 1 Right hand hung

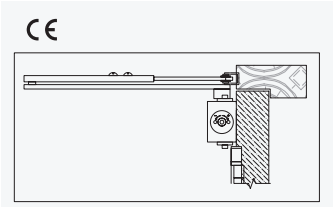

TS5-226

FIG. 66 Left hand hung

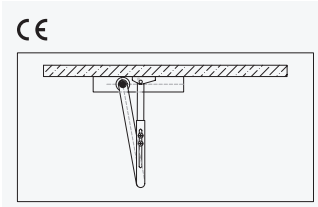

TS5-226

FIG. 1 Left hand hung

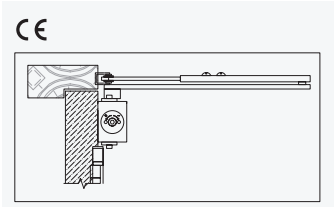

ADJUSTMENTS

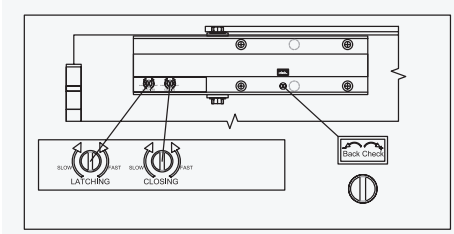

Boss Door Controls
3 & 4 Rutherford Square, Brucefield Industry Park,
Livingston, EH54 9BU
T: +44 (0) 1506 467 477
E: boss.sales@allegion.com

ALLEGION

bossdoorcontrols.com

ISSUE DATE: October 2026

boss door controls

TS5.226 RACK & PINION DOOR CLOSER

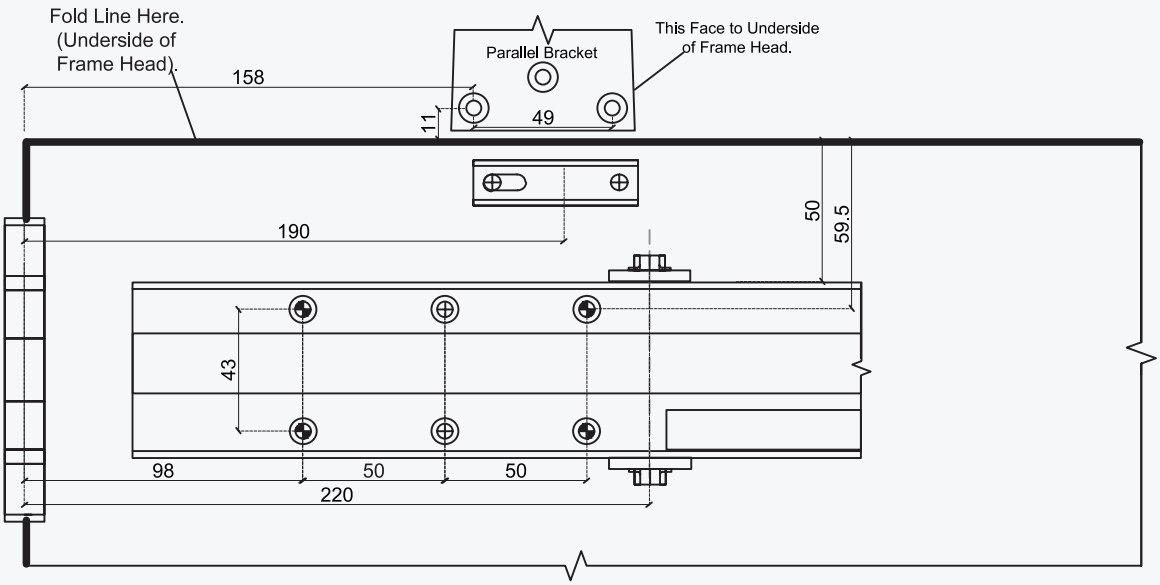

Dimensions in mm

TS5-226

Pre-load arm

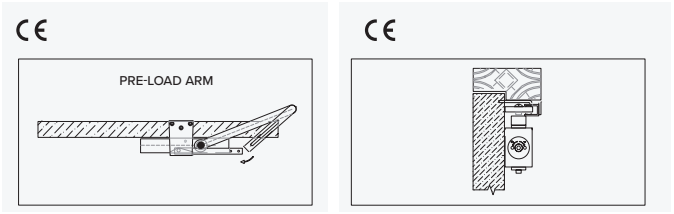

ADJUSTMENTS

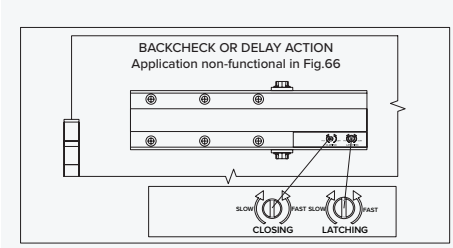

Boss Door Controls
3 & 4 Rutherford Square, Brucefield Industry Park,
Livingston, EH54 9BU
T: +44 (0) 1506 467 477
E: boss.sales@allegion.com
bossdoorcontrols.com

ISSUE DATE: October 2026

boss door controls

TS5.226 RACK & PINION DOOR CLOSER

ACCESSORIES



DROP PLATE
TDPF1 - satin stainless steel finish



HOLD-OPEN ARM
(not suitable for use on fire doors).
T5000HO-SIL - silver finish
T5000HO-BLK - black finish

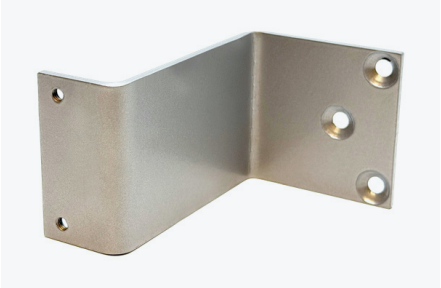

UPSTAND BRACKET
Suitable for overpanel or PVCu doors.
TUSB1-35MM - 35mm, silver finish
TUSB1-60MM - 60mm, silver finish
TUSB1-60MM-SSS - 60mm, satin stainless steel finish

ISSUE DATE: October 2026

Boss Door Controls
3 & 4 Rutherford Square, Brucefield Industry Park,
Livingston, EH54 9BU
T: +44 (0) 1506 467 477
E: boss.sales@allegion.com

ALLEGION
bossdoorcontrols.com

boss door controls

GENERAL MAINTENANCE

Door controls

Allegion has identified that many problems associated with overhead door closers can be attributed directly to errors in installation rather than problems with the door closer itself. If the door is not closing properly into the frame you should first disconnect the door closer (disconnect the arm(s)) and determine that there is not an underlying problem with the door, frame or any smoke /draft seals that might be fitted.

PLEASE NOTE:

The power of the door closer should not be used to overcome problems associated with the door or other items of hardware fitted to it. Under no circumstances should the closer body be dismantled.

Types of maintenance

Much of the routine maintenance recommended consists of a combination of visual and mechanical checks, cleaning and lubrication. Look out for the icons opposite which provide a ‘quick glance’ reminder of the maintenance required.

Visual checks

Primarily making a visual check on the product and surrounding door/frame looking for wear, damage, and general condition.



Functional checks

Consists of checking that the product operates properly ensuring the door can fully close without any binding or undue force required. Check that any seals or weatherstripping do not inhibit correct operation of the door.



Check fixings

Fixings need to be checked regularly and tightened when necessary. Check that no projection of fixings prevents the door from swinging freely.



Lubricating

Some products will benefit from periodic lubrication using a light machine oil or as instructed.



Cleaning

Build up of grease, dust and harmful chemicals should be removed to prevent corrosion and maintain the product finish.



Boss Door Controls
3 & 4 Rutherford Square, Brucefield Industry Park,
Livingston, EH54 9BU
T: +44 (0) 1506 467 477
E: boss.sales@allegion.com

ISSUE DATE: October 2026

ALLEGION

bossdoorcontrols.com

boss door controls

CLOSER MAINTENANCE

WEEKLY CHECKS



Release the door from the fully open position and ensure that it closes fully into the frame. Ensure the latch (if fitted) engages fully into the strike plate. Repeat the process a few times from different angles of opening to ensure the door closes consistently each time.



Check and adjust the closing and latching speeds if necessary.

Check that the door or hardware does not come into contact with the door frame or the surrounding structure.

QUARTERLY CHECKS



- The fixings of the closer body and the bracket are subject to stress and should be checked carefully to make sure they are tight.



- Periodically apply a little light machine oil to the moving joints of the arm and bracket.



- Check any fire and smoke seals to ensure they do not foul the action of the door.



- Check for any loss of fluid from the door closer body which would indicate a failing device.

- Clean the closer body, arms and bracket if necessary.

FIRE DOOR APPLICATIONS

When installed as part of a fire precaution system the door closing mechanism, including the door selector if used on a double door arrangement, should be checked in accordance with standing periodic fire testing procedures.

Routinely check that all fixings of the closer body and bracket are tight.

Routine care of finishes as necessary.

Boss Door Controls
3 & 4 Rutherford Square, Brucefield Industry Park,
Livingston, EH54 9BU
T: +44 (0) 1506 467 477
E: boss.sales@allegion.com

ISSUE DATE: October 2026

ALLEGION

bossdoorcontrols.com