58 -27 48587765 (B)

Left Hand Hung.

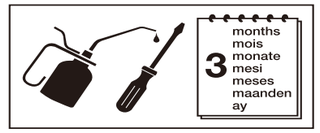

2-4 Model		
N° of Turns	Direction	Size
3	-	2
0	*	3
3	+	4

Power Adjustment

* : FACTORY PRE-SET

This Template Covers Regular Arm Installation to 180°

CE 2812-CPR	Boss Door Controls Ltd 3-4 Rutherford Square Buncefield Industry Park Livingston EN54 9BU Scotland	TS5.224V certifire CF689						UKCA 1121-CPR	
AD5423	20	FIG 1 EN 1154:1996+A1:2002	4	8	2/4	1	1	3	AD - UK AD8019	22
		FIG 6 EN 1154:1996+A1:2002	3	8	3/4	1	1	3		

EN1154		
Door Closer Power Size	Recommended Door Leaf Width Max mm	Test Door Mass (Kg)
1	750mm	20 Kg
2	850mm	40 Kg
3	950mm	60 Kg
4	1100mm	80 Kg
5	1250mm	100 Kg
6	1400mm	120 Kg

warringtonfire certifire CERTIFICATION

APPROVED PRODUCT
CF689

boss door controls

Right Hand Hung.

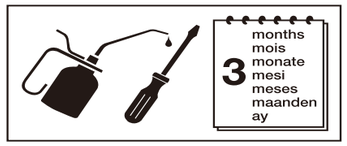

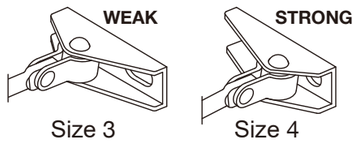

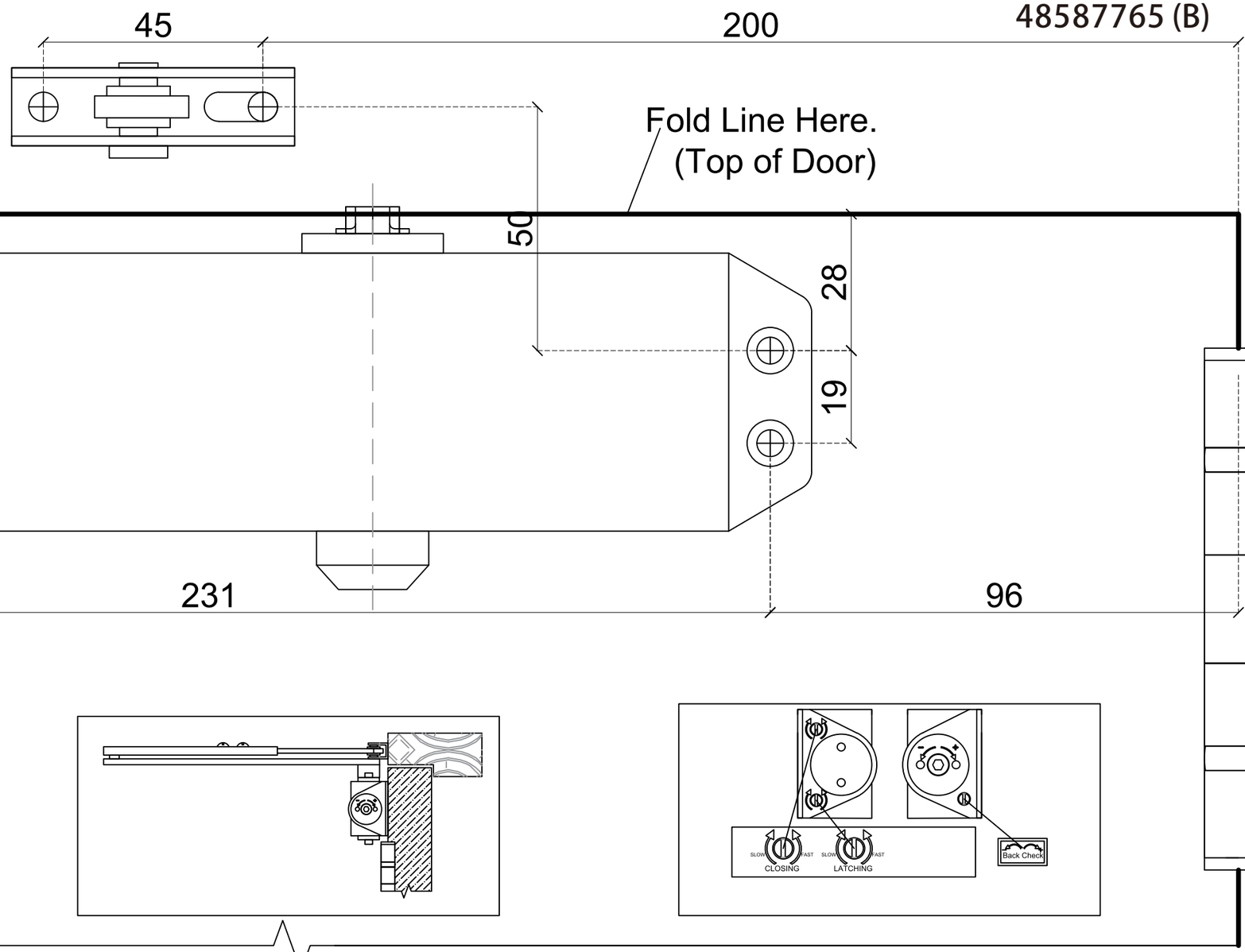

2-4 Model		
N° of Turns	Direction	Size
3	-	2
0	*	3
3	+	4

Power Adjustment

* : FACTORY PRE-SET

This Template Covers Regular Arm Installation to 180°

CE 2812-CPR	Boss Door Controls Ltd 3-4 Rutherford Square Buncefield Industry Park Livingston EN54 9BU Scotland	TS5.224V certifire CF689						UKCA 1121-CPR	
AD5423	20	FIG 1 EN 1154:1996+A1:2002	4	8	2/4	1	1	3	AD - UK AD8019	22
		FIG 6 EN 1154:1996+A1:2002	3	8	3/4	1	1	3		

EN1154		
Door Closer Power Size	Recommended Door Leaf Width Max mm	Test Door Mass (Kg)
1	750mm	20 Kg
2	850mm	40 Kg
3	950mm	60 Kg
4	1100mm	80 Kg
5	1250mm	100 Kg
6	1400mm	120 Kg

warringtonfire certifire CERTIFICATION

APPROVED PRODUCT
CF689

boss door controls