boss door controls

DOOR CONTROLS
OVERHEAD DOOR CLOSERS

TS1.203 RACK & PINION DOOR CLOSER

INTRODUCTION

An entry-level, budget power size EN 3 door closer featuring adjustable closing speed and latch action for smooth, controlled operation. Ideal for light to medium applications such as student accommodation and back-of-house areas.



FEATURES & FUNCTIONS

- Fixed power size EN 3
- UKCA & CE marked for door mount pull (Fig.1), transom mount push (Fig.61) and parallel arm mount (Fig.66) applications
- Suitable for doors up to 950mm wide and 60kg
- Adjustable closing speed
- Adjustable latch action (Fig. 66 parallel arm only)
- Suitable for fire and non-fire door applications
- Cover option available

CERTIFICATION

- CE Marked to EN 1154 (2812-CPR-AD10296)
- UKCA marked to EN 1154 (1121-CPR-UK-AD8075)
- Fire tested to EN 1634-1 on timber doors to achieve a 120 minute fire rating
- Certifire Approved (CF6170)
- Environmental Product Declaration in accordance with ISO 14025 and EN 15804
- 10 year guarantee
- DoP available at www.bossdoorcontrols.com/dop

Always refer to the certification page for up-to-date documentation

CE UKCA certifire

120 min TIMBER

EPD GUARANTEE 10 YEARS

Boss Door Controls
3 & 4 Rutherford Square, Brucefield Industry Park,
Livingston, EH54 9BU
T: +44 (0) 1506 467 477
E: boss.sales@allegion.com

ALLEGION

bossdoorcontrols.com

ISSUE DATE: October 2026

boss door controls

TS1.203 RACK & PINION DOOR CLOSER

PRODUCT FEATURES	PRODUCT REFERENCES
	TS1.203
Closer Type	projecting/scissor arm
Pull side door mount	■
Push side parallel arm mount	■
Push side transom mount	■
Closing power EN size (spring adjustable)	3
Maximum Door limits (width / weight)	950mm / 60kg
Maximum angle of opening	105˚
Closing speed adjustment	■
Latch action adjustment (Fig. 66 parallel arm only)	■
Adjustable backcheck	N/A
Adjustable delayed action	N/A
Mechanical hold-open facility	N/A
Matching arm & cover finish	N/A
Cover variant	Optional
Finishes available	SIL
CE Classification	3 8 3 1 1 3

■ Standard.

□ Available as an option/variant.

FINISHES

Supplied with matching cover and slide channel assembly.

Standard Finishes



Silver
SIL

Boss Door Controls
3 & 4 Rutherford Square, Brucefield Industry Park,
Livingston, EH54 9BU
T: +44 (0) 1506 467 477
E: boss.sales@allegion.com

ALLEGION

bossdoorcontrols.com

ISSUE DATE: October 2026

boss door controls

TS1.203 RACK & PINION DOOR CLOSER

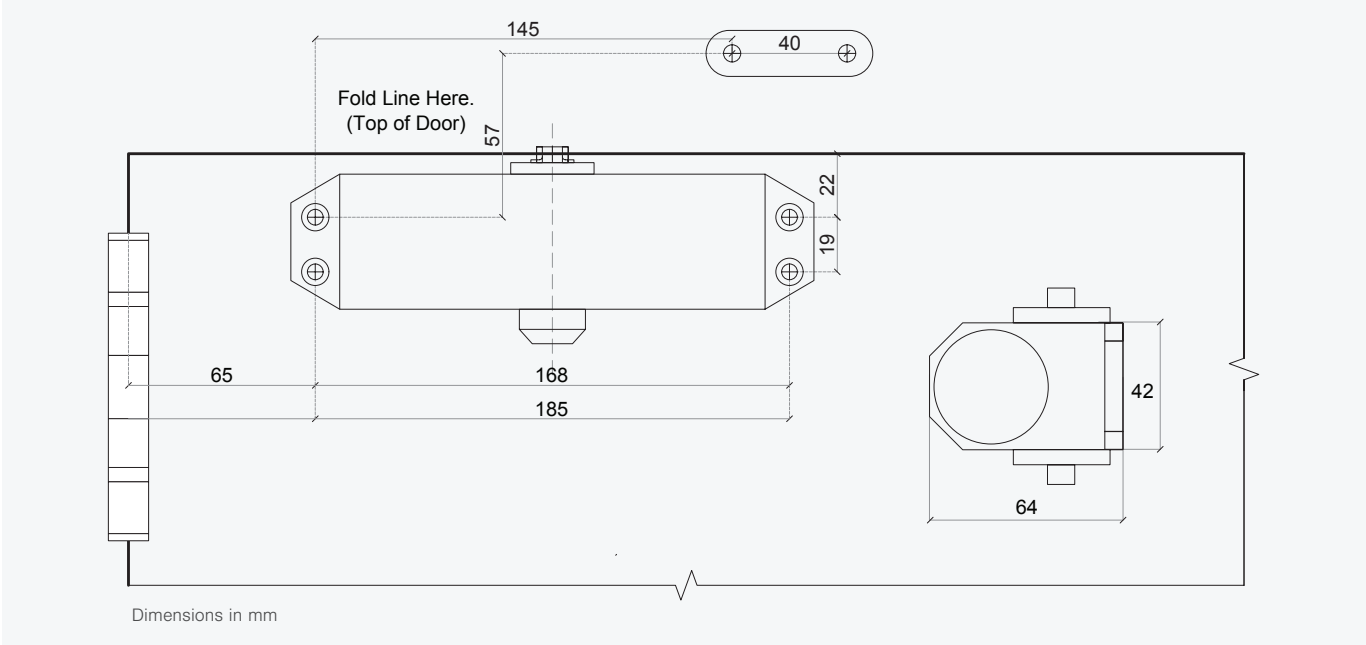

Dimensions in mm

TS1-203

FIG. 66 Right hand hung

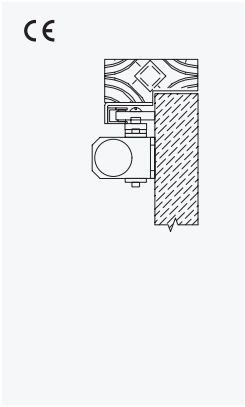

TS1-203

FIG. 1 Right hand hung

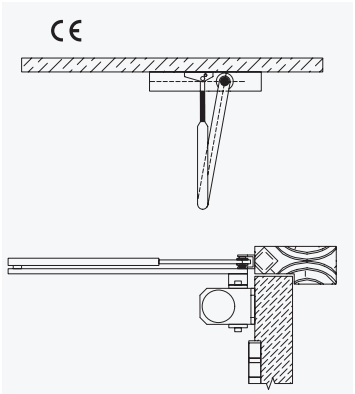

TS1-203

FIG. 66 Left hand hung

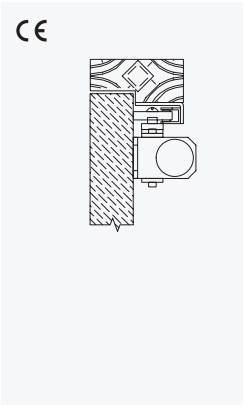

TS1-203

FIG. 1 Left hand hung

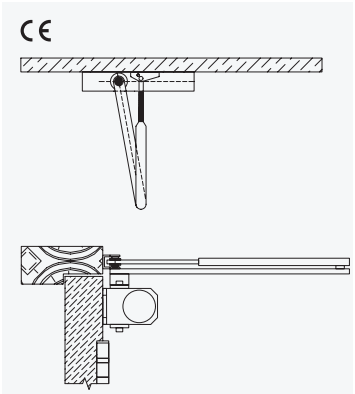

ADJUSTMENT

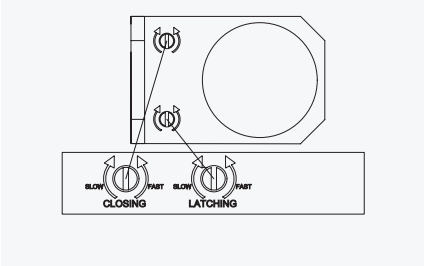

Boss Door Controls
3 & 4 Rutherford Square, Brucefield Industry Park,
Livingston, EH54 9BU
T: +44 (0) 1506 467 477
E: boss.sales@allegion.com

ALLEGION

bossdoorcontrols.com

ISSUE DATE: October 2026

boss door controls

GENERAL MAINTENANCE

Door controls

Allegion has identified that many problems associated with overhead door closers can be attributed directly to errors in installation rather than problems with the door closer itself. If the door is not closing properly into the frame you should first disconnect the door closer (disconnect the arm(s)) and determine that there is not an underlying problem with the door, frame or any smoke /draft seals that might be fitted.

PLEASE NOTE:

The power of the door closer should not be used to overcome problems associated with the door or other items of hardware fitted to it. Under no circumstances should the closer body be dismantled.

Types of maintenance

Much of the routine maintenance recommended consists of a combination of visual and mechanical checks, cleaning and lubrication. Look out for the icons opposite which provide a 'quick glance' reminder of the maintenance required.

Visual checks



Primarily making a visual check on the product and surrounding door/frame looking for wear, damage, and general condition.

Functional checks



Consists of checking that the product operates properly ensuring the door can fully close without any binding or undue force required. Check that any seals or weatherstripping do not inhibit correct operation of the door.

Check fixings



Fixings need to be checked regularly and tightened when necessary. Check that no projection of fixings prevents the door from swinging freely.

Lubricating



Some products will benefit from periodic lubrication using a light machine oil or as instructed.

Cleaning



Build up of grease, dust and harmful chemicals should be removed to prevent corrosion and maintain the product finish.

Boss Door Controls
3 & 4 Rutherford Square, Brucefield Industry Park,
Livingston, EH54 9BU
T: +44 (0) 1506 467 477
E: boss.sales@allegion.com

ISSUE DATE: October 2026

ALLEGION

bossdoorcontrols.com

boss door controls

CLOSER MAINTENANCE

WEEKLY CHECKS



Release the door from the fully open position and ensure that it closes fully into the frame. Ensure the latch (if fitted) engages fully into the strike plate. Repeat the process a few times from different angles of opening to ensure the door closes consistently each time.



Check and adjust the closing and latching speeds if necessary.

Check that the door or hardware does not come into contact with the door frame or the surrounding structure.

QUARTERLY CHECKS



- The fixings of the closer body and the bracket are subject to stress and should be checked carefully to make sure they are tight.



- Periodically apply a little light machine oil to the moving joints of the arm and bracket.
- Check any fire and smoke seals to ensure they do not foul the action of the door.



- Check for any loss of fluid from the door closer body which would indicate a failing device.
- Clean the closer body, arms and bracket if necessary.



FIRE DOOR APPLICATIONS

When installed as part of a fire precaution system the door closing mechanism, including the door selector if used on a double door arrangement, should be checked in accordance with standing periodic fire testing procedures.

Routinely check that all fixings of the closer body and bracket are tight.

Routine care of finishes as necessary.

Boss Door Controls
3 & 4 Rutherford Square, Brucefield Industry Park,
Livingston, EH54 9BU
T: +44 (0) 1506 467 477
E: boss.sales@allegion.com

ISSUE DATE: October 2026

ALLEGION

bossdoorcontrols.com