TS1.203 Fig. 66
Right Hand Hung.

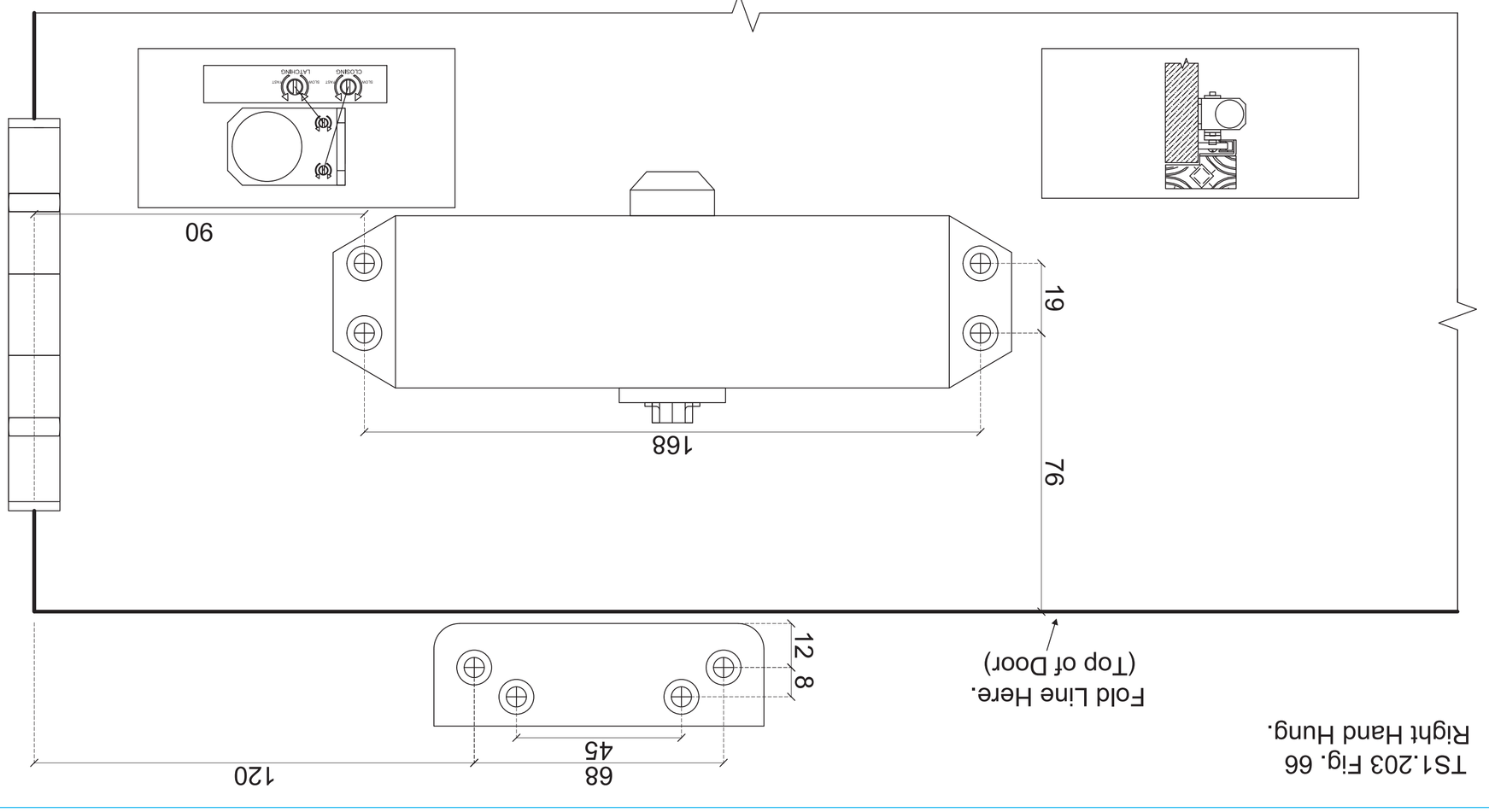

EN1154		
Door Closer Power Size	Recommended Door Leaf Width Max mm	Test Door Mass (Kg)
1	750mm	20 Kg
2	850mm	40 Kg
3	950mm	60 Kg
4	1100mm	80 Kg
5	1250mm	100 Kg
6	1400mm	120 Kg

NOT FIRE RATED
IN THIS APPLICATION

boss door controls

48724679
Revision A.

TS1.203 Fig. 66
Left Hand Hung.

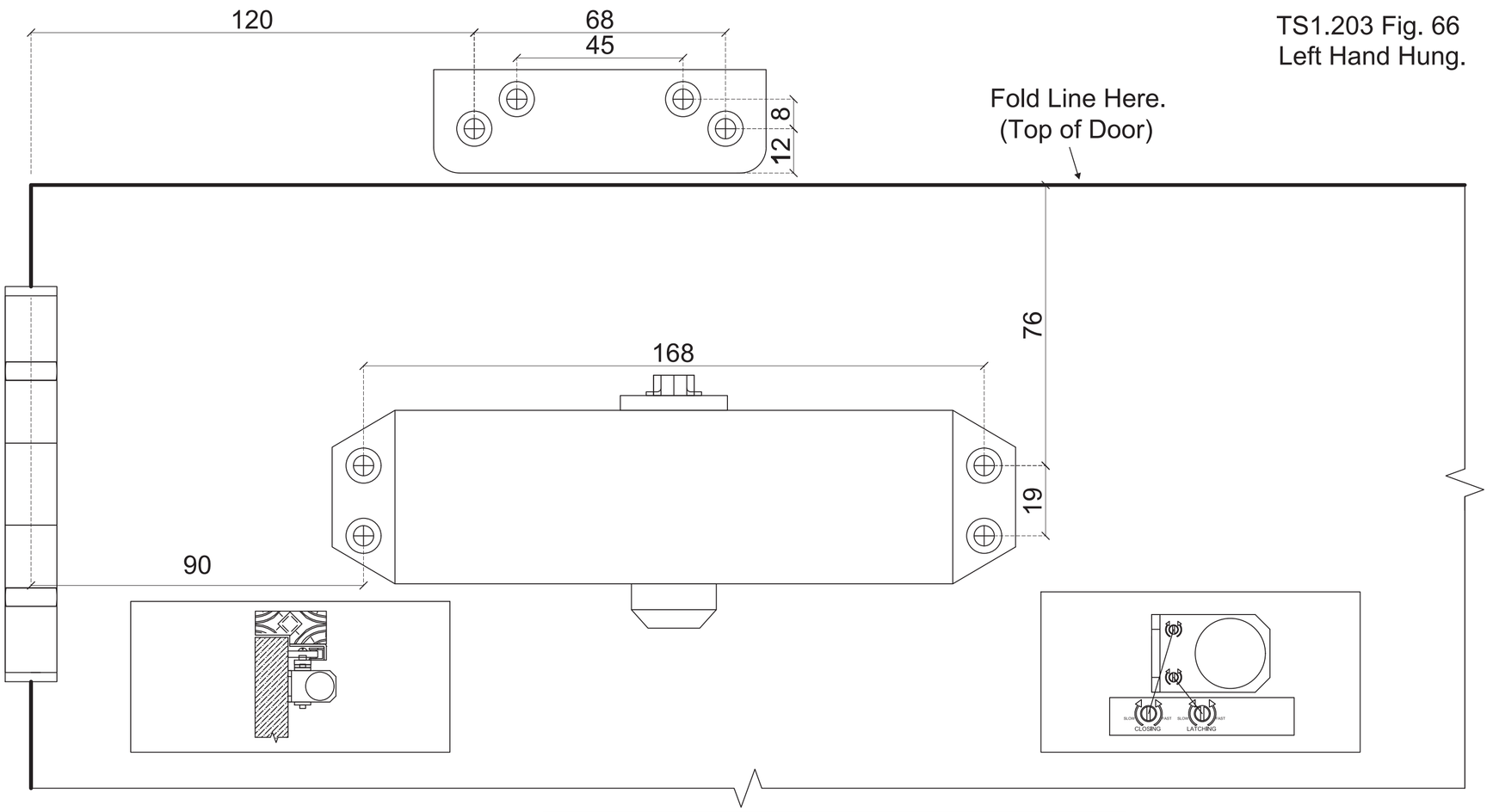

EN1154		
Door Closer Power Size	Recommended Door Leaf Width Max mm	Test Door Mass (Kg)
1	750mm	20 Kg
2	850mm	40 Kg
3	950mm	60 Kg
4	1100mm	80 Kg
5	1250mm	100 Kg
6	1400mm	120 Kg

NOT FIRE RATED
IN THIS APPLICATION

boss door controls

48724679
Revision A.