TS1.203 Fig. 1
Right Hand Hung.

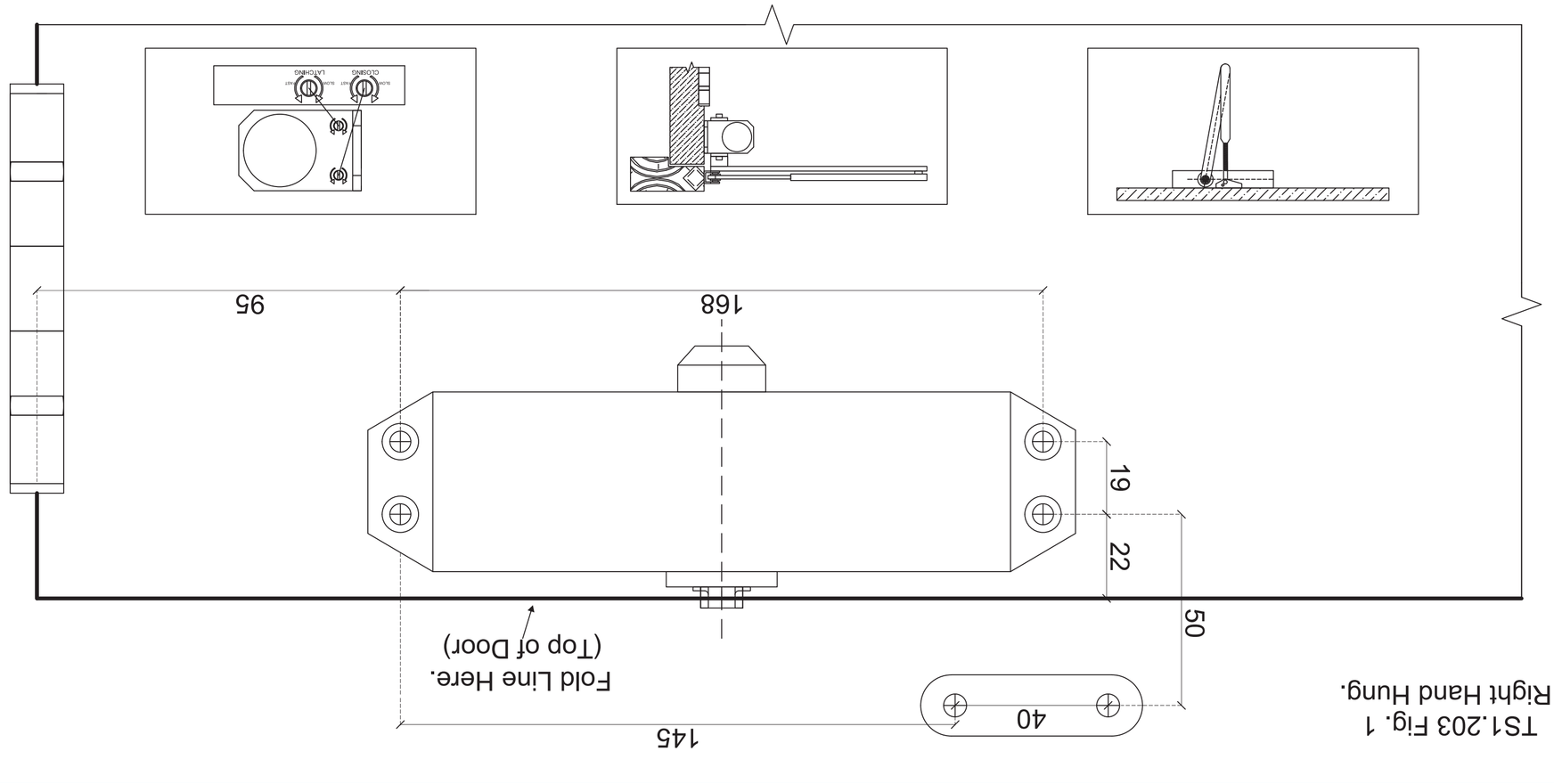

CE	2812-CPR	BOSS Door Controls Ltd 3-4 Rutherford Square, Brucefield Industrial Park, Livingston, West Lothian, EH54 9BU, United Kingdom	TS1.203						UKCA	1121-CPR
			warrington certifire certification		CF6170					
AD10295	20	Fig.1 - EN1154:1996+A1:2002 Fig.6 - EN1154:1996+A1:2002	3	8	3	1	1	3	UK AD8075	24

EN1154		
Door Closer Power Size	Recommended Door Leaf Width Max mm	Test Door Mass (Kg)
1	750mm	20 Kg
2	850mm	40 Kg
3	950mm	60 Kg
4	1100mm	80 Kg
5	1250mm	100 Kg
6	1400mm	120 Kg

boss door controls

48724678
Revision A.