boss door controls

PH.900 SERIES
PANIC & EMERGENCY EXIT HARDWARE

PH.907 EMERGENCY EXIT DEVICE WITH MORTICE NIGHTLATCH

INTRODUCTION

The Boss PH.907 push pad emergency exit device is designed to operate the mortice nightlatch supplied.

Products conforming to EN 179 are only intended for use by personnel who are fully aware of escape routesand have been trained to operate these devices.



FEATURES & FUNCTIONS

- Suitable for all single doors and in combination with Boss PH.905 on the active leaf of non-rebated double doors
- Designed to satisfy emergency exit applications
- Suitable for fire & smoke doors 665mm to 1300mm wide
- Anti-thrust device prevents forced latch retraction
- Site reversible - easy to hand on site
- Cylinder mortice nightlatch accepts euro and oval profile cylinders (cylinder not supplied)
- Nightlatch can be operated from outside by cylinder or other outside access device

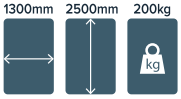



EN Classification
3 7 6 B 1 3 4 2 B A

CERTIFICATION

- CE Marked to EN 179 (2812-CPR-ABB0020)
- Certifire Approved (CF5506)
- Fire tested to EN 1634-1 for use on fire doors up to 60 mins timber / 240 mins steel
- Environmental Product Declaration in accordance with ISO 14025 and EN 15803
- DoP available at www.bossdoorcontrols.com/dop

Always refer to the certification page for up-to-date documentation

APPLICATIONS

Suitable for all single doors and, in combination with Boss PH.905, on the active leaf of non rebated double doors.

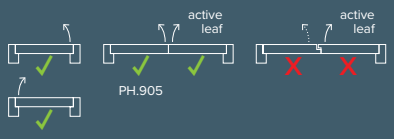

Boss Door Controls
3 & 4 Rutherford Square, Brucefield Industry Park,
Livingston, EH54 9BU

T: +44 (0) 1506 467 477
E: sales@bossdoorcontrols.co.uk

ALLEGION

www.bossdoorcontrols.co.uk

ISSUE DATE: March 2025

boss door controls

PH.907 EMERGENCY EXIT DEVICE WITH MORTICE NIGHTLATCH

PRODUCT FEATURES	PRODUCT REFERENCES	
	PH.907	**PH.907M**
CE marked	■	■
Panic exit device to EN 1125		
Emergency exit device to EN 179	■	■
Device type	Emergency mortice push pad	Emergency mortice push pad
Locking points	Single point mortice nightlatch	Single point mortice nightlatch
Suitable for timber or metal doors	Timber	Metal
Suitable for single doors	■	■
Suitable for double door combinations	★	★
Min. / Max. door width (per leaf)	N/A	N/A
Push bar cut on site	N/A	N/A
Site reversible	■	■
Alarm activation		
Finishes available	SE	SE
CE Classification	3 7 6 B 1 3 4 2 B A	3 7 6 B 1 3 4 2 B A

■ Standard.

□ Available as an option/variant.

★ Used in combination with Boss PH.905 vertical bolt device on non rebated double doors.

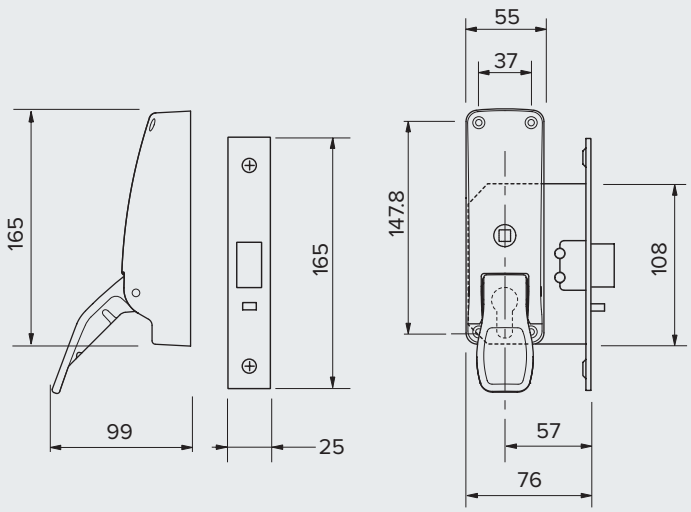

Dimensions in mm

Boss Door Controls
3 & 4 Rutherford Square, Brucefield Industry Park,
Livingston, EH54 9BU

T: +44 (0) 1506 467 477
E: sales@bossdoorcontrols.co.uk

ALLEGION

www.bossdoorcontrols.co.uk

ISSUE DATE: March 2025

boss door controls

PH.907 EMERGENCY EXIT DEVICE WITH MORTICE NIGHTLATCH - **ACCESSORIES**

A range of additional or alternative components is available for the PH.900 Series of exit hardware.



OAD.900LE - OUTSIDE ACCESS DEVICE

Provide a strong and durable means of accessing the door from the outside. Lever operated.



OAD.900KE - OUTSIDE ACCESS DEVICE

Provide a strong and durable means of accessing the door from the outside. Knob operated.



PH904MDS - METAL DOOR BOX STRIKE

Metal box strike for use with **PH.904** or **PH.907** mortice nightlatch.

ISSUE DATE: March 2025

Boss Door Controls
3 & 4 Rutherford Square, Brucefield Industry Park,
Livingston, EH54 9BU

T: +44 (0) 1506 467 477
E: sales@bossdoorcontrols.co.uk

ALLEGION

www.bossdoorcontrols.co.uk

boss door controls

PH.907 EMERGENCY EXIT DEVICE WITH MORTICE NIGHTLATCH - **FIXING KITS**

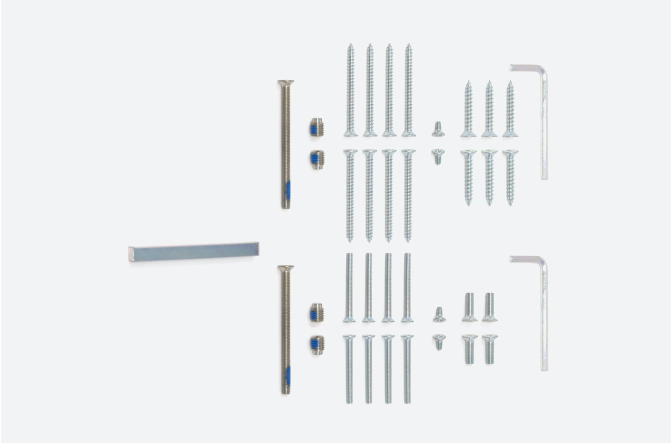

PH900EMT - EMERGENCY MORTICE LATCH FIXING KIT

Fixing kit for emergency mortice latch.

All Boss exit devices are supplied with self-tapping screws suitable for timber and metal doorsets.

For customers who prefer machine screws, alternative fixing packs are available.

Boss Door Controls
3 & 4 Rutherford Square, Brucefield Industry Park,
Livingston, EH54 9BU

T: +44 (0) 1506 467 477
E: sales@bossdoorcontrols.co.uk

ALLEGION

www.bossdoorcontrols.co.uk

ISSUE DATE: March 2025

boss door controls

INSTALLATION AND MAINTENANCE

Panic and emergency exit hardware play a vital role in a building's escape route and it is important that these devices are installed, inspected and maintained regularly to ensure safety at all times.

Types of maintenance

Much of the routine maintenance recommended consists of a combination of visual and mechanical checks, cleaning and lubrication. Look out for the icons opposite which provide a 'quick glance' reminder of the maintenance required.

Exit hardware

All panic hardware installation will be operated by a horizontal "Push bar" or "Touch bar" which runs across the width of the door. The operating bar will be used to operate anything from a single rim latch to multipoint side or top/bottom latches.

Top and bottom latches on Boss PH.900 panic exit hardware are operated by solid rods which are connected to the operating bar.

INSTALLATION

Comprehensive installation instructions are provided with all Boss PH.900 Series exit devices. To maximise the efficiency and life cycle of these products it is important to follow the installation guidance carefully to achieve an accurate installation. To meet the European standard, the door and frame must be in a good condition, correctly hung and not distorted. We recommend verifying the door construction before installation to ensure it allows for the use of the device.

Visual checks

Primarily making a visual check on the product and surrounding door/frame looking for wear, damage, and general condition.



Functional checks

Consists of checking that the product operates properly without any binding or undue force required. Check that any seals or weatherstripping do not inhibit correct operation of the door.



Check fixings

Fixings need to be checked regularly and tightened when necessary. Check that no projection of fixings prevents the door from swinging freely.



Lubricating

Some products will benefit from periodic lubrication using a light machine oil or as instructed.



Cleaning

Build up of grease, dust and harmful chemicals should be removed to prevent corrosion and maintain the product finish.



MAINTENANCE AND CHECKING FUNCTION

In view of the important role the panic and emergency exit device plays in maintaining the safety and security of your building and its occupants, it is recommended that routine maintenance checks are carried out at intervals of not more than 1 month by the occupier or their approved representative.

Boss Door Controls
3 & 4 Rutherford Square, Brucefield Industry Park,
Livingston, EH54 9BU

T: +44 (0) 1506 467 477
E: sales@bossdoorcontrols.co.uk

ALLEGION

www.bossdoorcontrols.co.uk

ISSUE DATE: March 2025

boss door controls

EXIT HARDWARE MAINTENANCE

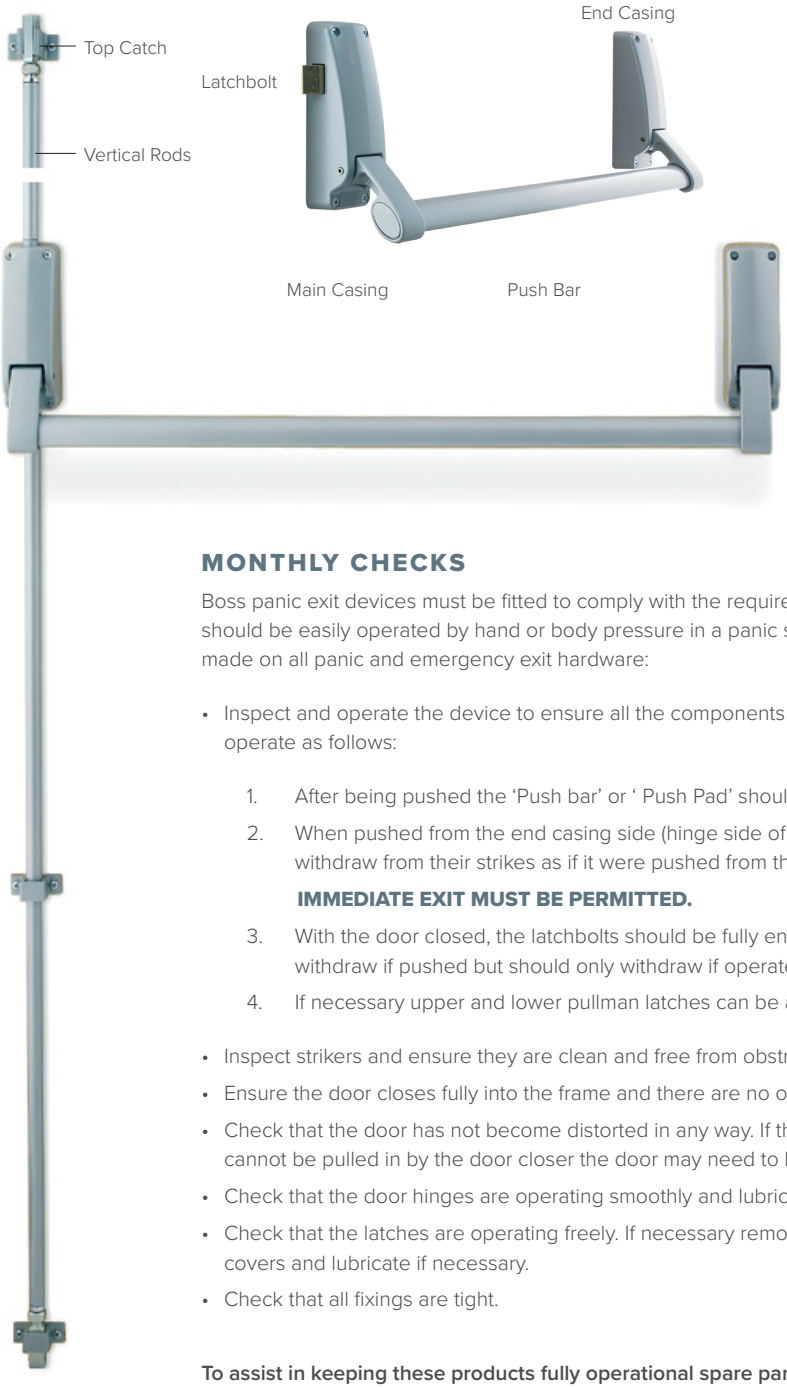

MONTHLY CHECKS

Boss panic exit devices must be fitted to comply with the requirements of EN 1125 which states that the device should be easily operated by hand or body pressure in a panic situation. We suggest the following checks be made on all panic and emergency exit hardware:

- Inspect and operate the device to ensure all the components are in satisfactory working condition and operate as follows:

    1. After being pushed the 'Push bar' or ' Push Pad' should return automatically to its initial position.
    2. When pushed from the end casing side (hinge side of door) the latchbolt(s) should completely withdraw from their strikes as if it were pushed from the main casing side.

       IMMEDIATE EXIT MUST BE PERMITTED.
    3. With the door closed, the latchbolts should be fully engaged into their strikers. They should not withdraw if pushed but should only withdraw if operated by the 'Push bar'.
    4. If necessary upper and lower pullman latches can be adjusted to ensure the accuracy of latching.

- Inspect strikers and ensure they are clean and free from obstruction.
- Ensure the door closes fully into the frame and there are no obstructions.
- Check that the door has not become distorted in any way. If the door does not meet the frame stops and cannot be pulled in by the door closer the door may need to be replaced.
- Check that the door hinges are operating smoothly and lubricate if necessary.
- Check that the latches are operating freely. If necessary remove the end box covers and/or pullman latch covers and lubricate if necessary.
- Check that all fixings are tight.

To assist in keeping these products fully operational spare part kits are available.

If problems persist and for some reason the panic device does not operate properly, consult your approved supplier or contact the Allegion Customer Care Team on 0330 8080 617

Boss Door Controls
3 & 4 Rutherford Square, Brucefield Industry Park,
Livingston, EH54 9BU
T: +44 (0) 1506 467 477
E: sales@bossdoorcontrols.co.uk

ALLEGION

www.bossdoorcontrols.co.uk

ISSUE DATE: March 2025