48260308
Revision A

INSTALLATION INSTRUCTIONS

PUSH BAR MORTICE PANIC NIGHTLATCH DEVICE TO EN 1125:2008

PUSH PAD MORTICE EMERGENCY NIGHTLATCH DEVICE TO EN 179:2008

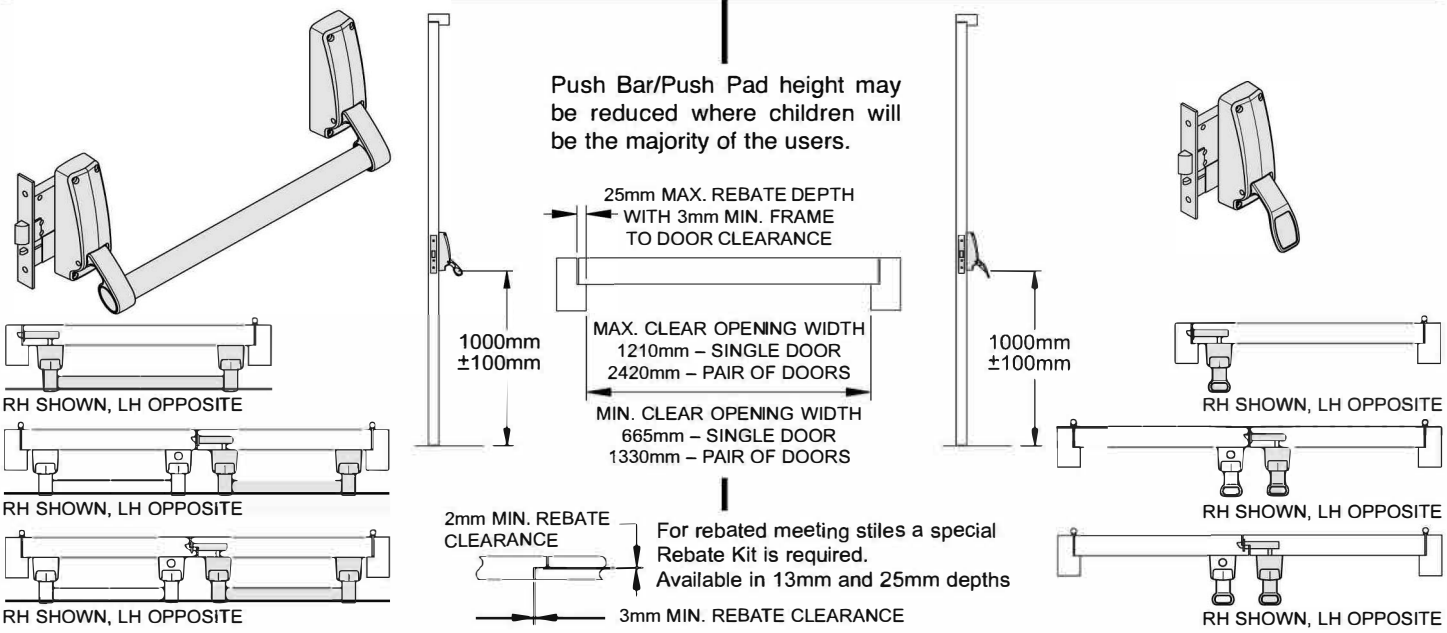

TO COMPLY WITH THE ABOVE STANDARDS, DOOR LEAF MUST NOT EXCEED 2500mm HIGH X 1300mm WIDE X 200KG WEIGHT MAX.

THIS DEVICE IS TO BE USED WITH THE MORTICE NIGHTLATCH SUPPLIED.
WHEN ACCESS FROM OUTSIDE IS REQUIRED THE MORTICE NIGHTLATCH IS SUITABLE FOR USE WITH EITHER A EURO OR OVAL PROFILE CYLINDER.

IMPORTANT: THE SAFETY FEATURES OF THESE PRODUCTS ARE ESSENTIAL TO THEIR COMPLIANCE WITH THE ABOVE STANDARDS. NO MODIFICATIONS OF ANY KIND, OTHER THAN THOSE DESCRIBED IN THESE INSTRUCTIONS ARE PERMITTED.

THIS PRODUCT IS INTENDED FOR USE ON SINGLE AND / OR DOUBLE LEAF OUTWARD OPENING FIRE ESCAPE ROUTE DOORS.

BOTH OPERATOR MECHANISM AND MORTICE NIGHTLATCH ARE SUPPLIED TO SUIT A RIGHT HAND DOOR BUT MAY BE REVERSED.
MORTICE NIGHTLATCH IS SUPPLIED FOR USE WITH A EURO PROFILE CYLINDER BUT MAY BE CONVERTED FOR USE WITH AN OVAL PROFILE CYLINDER - FOR APPLICATIONS WHERE NO CYLINDER IS REQUIRED DO NOT CONVERT PROFILE.
TO REVERSE HANDING TO LEFT HAND DOOR OR TO CONVERT TO OVAL PROFILE CYLINDER PROCEED AS FOLLOWS:

OPERATOR MECHANISM HANDING

1) Remove Backplate screw (A).
2) Slacken Backplate screw (B) (2 turns approximately).
3) Lift and swing Backplate to position shown in diagram and gently re-tighten screw (B) (this retains Actuator and Spring whilst changing hand).
4) Lift out Follower turn over and re-insert into Case bearing so that 'L' on hub is uppermost (see inset). Ensure that both legs are correctly aligned as shown in diagram.
5) Re-fit Backplate and operate to ensure correct action.

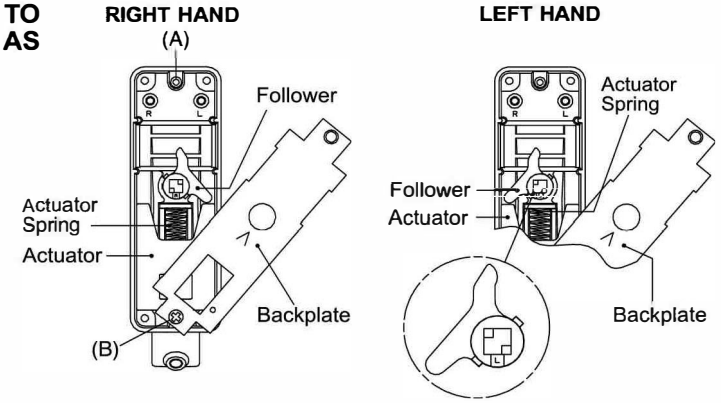

MORTICE NIGHTLATCH HANDING

1) Push back Latchbolt, hold in and remove screws (C) and (D) through holes in cap.
2) Release and remove Latchbolt, turn over and re-insert.
3) Push back Latchbolt, refit screws fully and check operation.

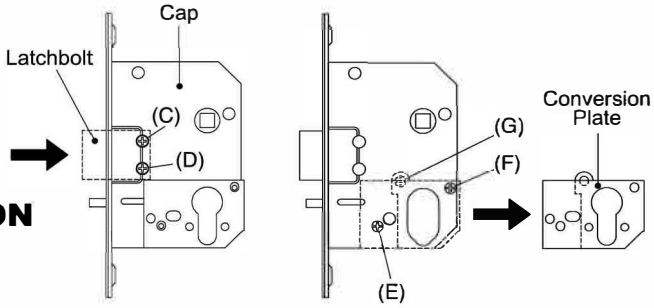

MORTICE NIGHTLATCH PROFILE CONVERSION

1) Remove screws (E), (F) and (G) on reverse side and discard.
2) Slide Conversion Plate from Lock Case and discard.

INSTALLATION

1) Mark datum line on **PUSH SIDE** of door for required Push Bar/Push Pad height.
   See Diagram 1

2) Lay the Fixing Template onto **PUSH SIDE** of door with both datum and relevant edge of door in line. Mark position for Mortice Box fixing holes, Follower centre and the position of the Lock Case and Forend around edge of door.

3) For plain meeting stile door, position Lock on edge of door and mark Case and Forend thickness in centre of door. Mortice door to depths shown ensuring a reasonably good but not overtight fit.
   See Diagram 2
   or
   For rebated meeting stile door, mark a line as shown from edge of rebate and remove rebate to full depth. Position Lock on edge of door, mark Case thickness and mortice door to depth shown ensuring a reasonably good but not overtight fit.
   See Diagram 3

4) Drill hole for Follower on **PUSH SIDE** into the mortice cavity **only** as shown on template.

5) If installing a EURO or OVAL Profile Cylinder, lay Fixing Template on **PULL SIDE** of door with datum and relevant edge of door in line and mark position of relevant Cylinder Profile holes. Drill and prepare door for Cylinder Profile into mortice cavity **only.**

6) For plain meeting stile door, insert Lock into door and secure with screws.
   See Diagram 2
   or
   For rebated meeting stile door, insert Lock into door with Rebate Packer behind Inner Forend and secure with longer screws supplied in Rebate Kit.
   See Diagram 3

7) If installing a EURO or OVAL Profile Cylinder, insert Cylinder into Lock through door and secure with M5 Cylinder Screw through Forend.
   NOTE: Check operation ensuring there is sufficient clearance around Cylinder to enable self-location in Lock to prevent accelerated wear.
   It is also recommended that a Finger Pull or Bow Handle and Escutcheon be fitted to prevent possible key damage or abuse.
   See Diagram 4

8) Fit Outer Forend and secure with screws.
   NOTE: Ensure that the Outer Forend is flush with the door edge.
   See Diagram 4

9) If installing an Outside Access Device, mark and prepare door and fix as per separate instructions provided.

10) Insert Square Drive Spindle into Lock Follower. Mark 9mm projection from door face and cut to length.
    See Diagram 5

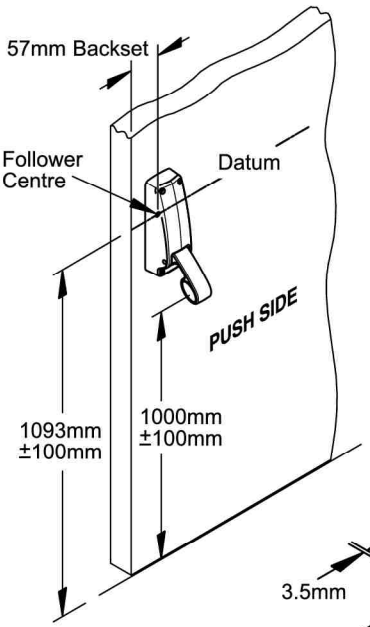

Diagram 1

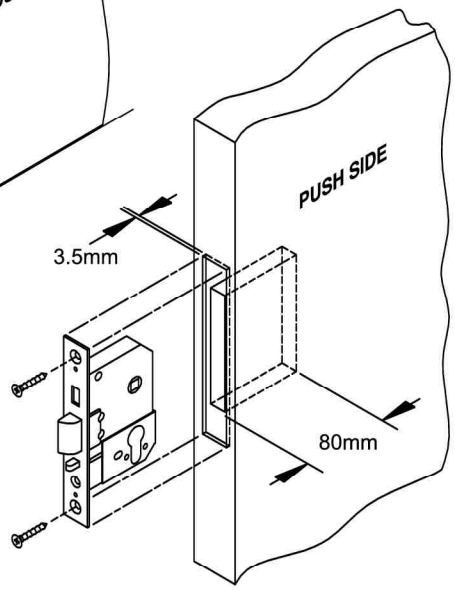

Diagram 2

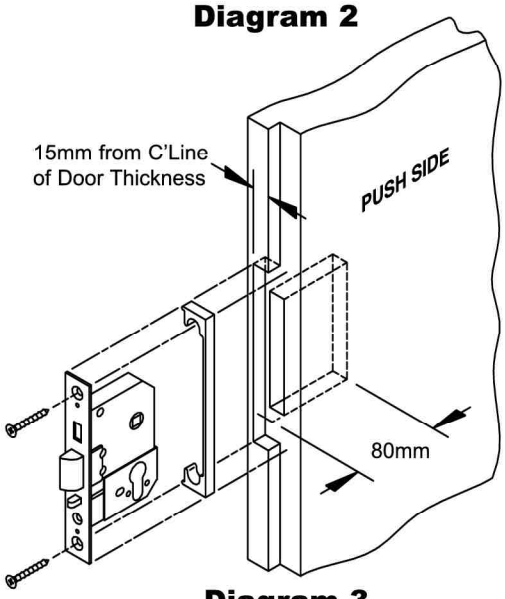

Diagram 3

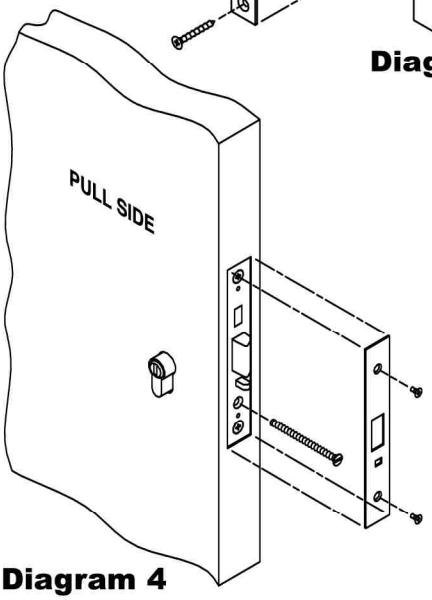

Diagram 4

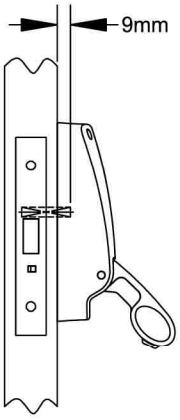

Diagram 5

11) Before fixing Mortice Box to door ensure that 'L' or 'R' marking on Follower aligns with '^' on Backplate.
See Diagram 6

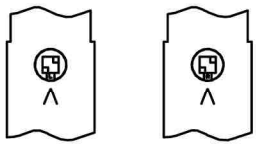

Diagram 6

Insert projecting Square Drive Spindle into Mortice Box Follower and secure with screws inline with pre-marked fixing holes. Check operation of Latchbolt by depressing Push Bar Lever or Push Pad.
See Diagram 5

12) Close the door gently onto the frame or the second opening door leaf for double door applications and mark position of the Latchbolt.

13) For Standard Striker installation, transfer the lines of the Latchbolt to the position required when door is closed. Mortice frame or door to accept Box Section of Striker to depth shown ensuring it is centrally aligned with Latchbolt. Position the Box Section of Striker in hole, and ensuring correct alignment mark around Plate and mortice to finish flush.
See Diagram 7 or 8
or
For Rebated Striker installation, mark a line as shown from edge of rebate and remove rebate to enable Rebate Striker supplied in Rebate Kit to sit flush and centrally aligned with Latchbolt. Mortice door to accept Leg on Rebated Striker and Latchbolt to depth shown. Secure packer to Rebated Striker with screws supplied in Rebate Kit.
See Diagram 9

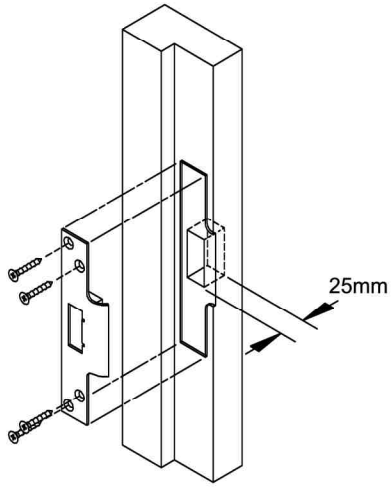

Diagram 7

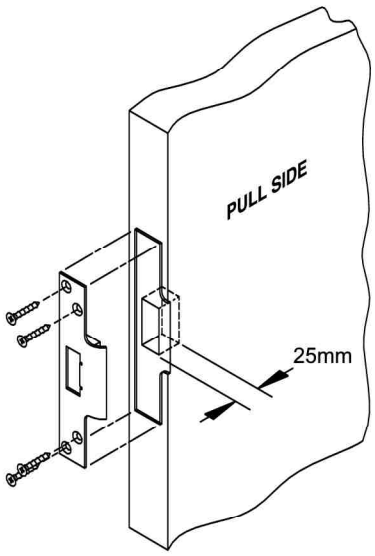

Diagram 8

14) Fit Standard Striker or Rebated Striker with two of the four screws provided and check closing and opening operation of device. Adjust position of Striker if necessary and secure with remaining screws.

15) Pull door into closed position and ensure:
(a) that Latchbolt retracts smoothly across Striker and makes full engagement into Box Section.
(b) that door is secure when pressure is applied.

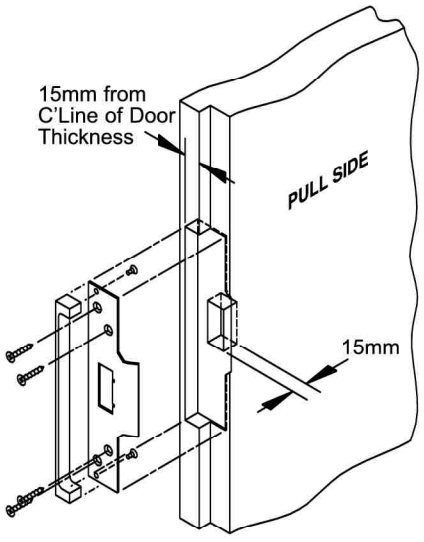

Diagram 9

16) Depress Push Bar Lever or Push Pad and ensure:
(a) that Latchbolt retracts fully from Striker and permits opening without hindrance.
(b) that Latchbolt fully returns when Push Bar Lever or Push Pad is released.

INSTALLATION OF PUSH PAD DEVICE IS NOW COMPLETE. CONTINUE FOR PUSH BAR DEVICE.

17) Fit End Box on hanging stile of door ensuring that it is vertical and level with Mortice Box.
See Diagram 10

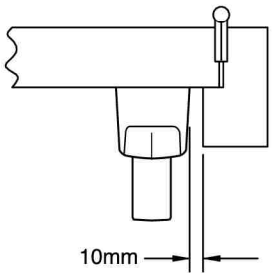

Diagram 10

18) Accurately measure dimension ‘C’ across Push Bar Levers, deduct the amount shown, and cut Push Bar to length.

See Diagram 11

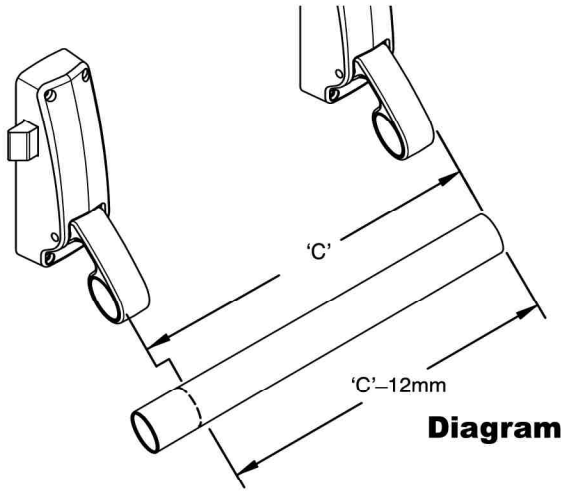

Diagram 11

19) Insert Push Bar into Levers, insert Plug into each end of Push Bar and flush with face of Levers. Secure Push Bar by tightening Clamp Screws on underside of Levers with Allen Key provided.

NOTE: These screws must be sufficiently tightened to give adequate rigidity of Push Bar.

See Diagram 12

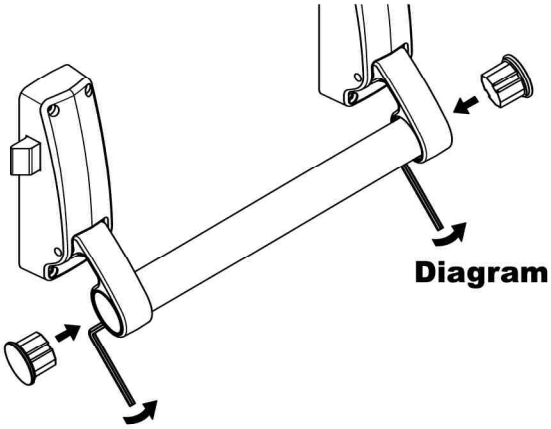

Diagram 12

20) Again test for correct operation as described in items 15 and 16.

21) Adhere green ‘Push Bar to Open’ sign immediately above the Push Bar.

OPERATIONAL INSTRUCTIONS

a) For device arrangements fitted to comply with EN 1125 no instruction of operation is needed for the end users as the device is easily operated by hand or body pressure in a panic situation.

b) For device arrangements fitted to comply with EN 179 it is recommended that the end users be instructed to operate the Push Pad devices using flat **palm** of the hand.

DOGGING DEVICE

Where provided, this device is incorporated in the End Box of Push Bar devices and enables the Latchbolt to be held in the withdrawn condition, allowing the door to be used as free-access when required. Installation is described in item 17.

To engage: depress Push Bar and push Dogging Lever towards door face.

To release: Pull Dogging Lever away from door face.

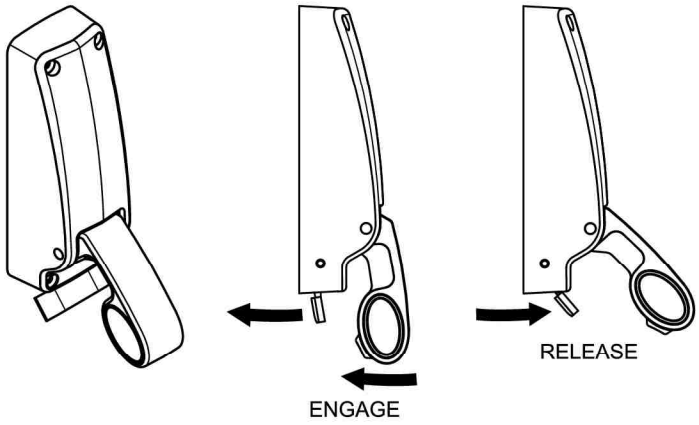

PRODUCT INFORMATION

- Category of projection: Category 2
- Field of door application: Category A
- Resistance of door leaf against pulling force of the recommended fixing screws: 1000N maximum achieved

ADDITIONAL INSTALLATION REQUIREMENTS

- Before installation ensure door and frame are in good condition, correctly hung and not distorted
  Note - Maximum door distortion of 5mm to ensure safe exit.

- It is not recommended that exit devices be fitted to hollow core doors unless specially designed for this type of door.

- It is recommended to verify that the door construction allows the use of the device, i.e. to verify that offset hinges and engaging leaves allow both leaves to be opened simultaneously, or to verify that the gap between door leaves does not differ from that defined by the exit device producer, or to verify that the opening elements do not interfere, etc.

- Before fitting an emergency exit device to a fire/smoke resisting door, the fire certification of the fire door assembly on which the exit device has been tested to prove suitability for use on a fire door should be examined. It is of utmost importance that an exit device is not used on a fire door assembly of a greater fire resistance time than approved for.

- Care should be taken to ensure that any seals or weather-stripping fitted to the complete door assembly does not inhibit the correct operation of the emergency exit device.

- The horizontal bar should normally be installed at a height of between 900 mm and 1100 mm from the finished floor level, when the door is in the secured position. Where it is known that the majority of the occupants of the premises will be young children, consideration should be given to reducing the height of the bar.

- On double door sets with rebated meeting stiles and where both leaves are fitted with emergency exit devices, it is essential to check that either leaf will open when its emergency exit device is activated and also that both leaves will open freely when both emergency exit devices are operated simultaneously.

- Category 2 (Standard projection) emergency exit devices should be used in situations where there is restricted width for escape, or where the doors to be fitted with the emergency exit devices are not able to open beyond 90°

- Different fixing can be necessary for fitting emergency exit devices to wood, metal or frameless glass doors. For more secure fixing, male and female through-door bolts, reinforcement and rivets can be used.

- These exit devices are not intended for use on double action (double swing) doors.

- These fixing instructions should be carefully followed during installation.
  These instructions and any maintenance instructions should be passed on by the installer to the user.

- When installing lever operating emergency exit devices, particularly on doors with raised or recessed surfaces, consideration should be given to minimizing any potential safety risks, such as the trapping of fingers or clothing.

- The bolt heads and keepers should be fitted to provide secure engagement. Care should be taken to ensure that no projection of the bolt heads, when in the withdrawn position, can prevent the door swinging freely.

- Where emergency exit devices are to be fitted to double doorsets with rebated meeting stiles and self closing devices, a door coordinator device in accordance with EN 1158 should be fitted to ensure the correct closing sequence of the doors.
  This recommendation is particularly important with regard to smoke/fire-resisting door assemblies.

- No devices for securing the door in the closed position should be fitted other than specified in EN 1125 / EN 179.
  This does not preclude the installation of self-closing devices.

- If a door closing device is to be used to return the door to the closed position, care should be taken not to impair the use of the doorway by the young, elderly and infirm.

- Where applicable, the “Push to open” sign should be applied on the inside face of the door immediately above the operating element.

MAINTENANCE INSTRUCTIONS

To ensure performance in accordance with the relevant standard, the following routine maintenance checks should be undertaken at intervals of not more than one month.

a) Inspect and operate the emergency exit device to ensure that all components are in a satisfactory working condition.
Using a force gauge, measure and record the operating forces to release the exit device.

b) Ensure that the keepers are clean and free from obstruction

c) Grease the corresponding areas of the panic device latch bolt and strike plate with mineral grease having a working temperature suitable for the current conditions of use.

d) Check that no additional locking devices have been added to the door since its original installation.

e) Check periodically that all components of the system are still correct in accordance with the list of approved components originally supplied with the system.

f) Check periodically that the operating element is correctly tightened and, using a force gauge, measure the operating forces to release the exit device.
Check that the operating forces have not changed significantly from the operating forces recorded when originally installed.

g) Check that all fixing screws are tight.

These instructions should be passed on by the installer to the user on completion of installation.

Additional accessories approved for use with this product

- OAD.900 Outside access devices

CE	35 Rocky Lane, Aston Birmingham, B6 5RQ United Kingdom
2812 - CPR - AAA0011	2025
EN 1125 : 2008	3 7 6 B 1 3 2 2 A A

Dangerous Substances: None

Products conforming to this certification
PH.901, PH.902, PH.903, PH.904

CE	35 Rocky Lane, Aston Birmingham, B6 5RQ United Kingdom
2812 - CPR - ABB020	2025
EN 179 : 2008	3 7 6 B 1 3 4 2 B A

Dangerous Substances: None

Products conforming to this certification
PH905, PH.906, PH907

certifire
CF 5506

boss door controls

ALLEGION