boss door controls

PH.900 SERIES
PANIC & EMERGENCY EXIT HARDWARE

OAD.900 / 9260 OUTSIDE ACCESS DEVICES

INTRODUCTION

Outside access devices designed for use with Boss panic and emergency exit hardware for gaining access through an escape door. When used as part of the panic or emergency exit hardware solution, the devices provide a strong and durable means of access, lockable from the outside.



OAD.900.LE

FEATURES & FUNCTIONS

- Designed to suite with all Boss UKCA/CE compliant exit devices
- For single and double doors (fitted to the first opening leaf)
- Fixings suitable for timber and metal doors
- Powder coated for additional durability



OAD.900.KE

OAD.900 FEATURES & FUNCTIONS

- Lever or knob operated version to suit doors 40 to 100mm thick
- Anti-vandal design allows the lever to rotate when the unit is locked
- Site reversible lever provides good grip and easy action
- Ergonomic knob design provides improved grip
- Lever version BS8300 compliant
- Supplied with 40mm euro profile cylinder as standard
- Common footprint allows units to be interchanged
- Locked or unlocked by key operation
- Optional key retention feature



9260

9260 FEATURES & FUNCTIONS

- Suitable for single or double doors
- Supplied with extra long spindles for doors 40mm to 60mm thick
- Digital code lock has over 2047 non sequential code options
- Supplied with extra long spindles for use with Boss exit devices
- Reversible lever operation for left or right hand applications
- Code changed by removing the unit from the door
- Not suitable for use with Boss PH.904 or PH.907

CERTIFICATION

- Fire tested to EN 1634-1 for use on fire doors up to 60 mins timber / 240 mins steel
- Environmental Product Declaration in accordance with ISO 14025 and EN 15803

60 min TIMBER · 4hr STEEL · EPD · 5 GUARANTEE

Boss OAD.900 outside access devices are certified for 120 mins on steel doors when used in conjunction with Boss PH.901, PH.903 and PH.906.

Boss 9260 is not fire tested and is not suitable for fire doors.

Boss Door Controls
3 & 4 Rutherford Square, Brucefield Industry Park,
Livingston, EH54 9BU

T: +44 (0) 1506 467 477
E: sales@bossdoorcontrols.co.uk

ALLEGION

www.bossdoorcontrols.co.uk

ISSUE DATE: March 2025

boss door controls

OAD.900 / 9260 OUTSIDE ACCESS DEVICES

PRODUCT FEATURES	PRODUCT REFERENCES		
	OAD.900.KE	**OAD.900.LE**	**9260**
Suitable for panic exit devices	■	■	■
Suitable for emergency exit devices	■	■	■
Access provided by	knob and euro profile cylinder	lever handle and euro profile cylinder	lever handle and digital code
Suitable for door thicknesses	40 -100mm	40 -100mm	40 -60mm
Supplied with euro profile cylinder	■	■	
Site reversible	■	■	**see below
Finishes available	SE	SE	SS

■ Standard.

□ Available as an option/variant.

OAD.900.LE

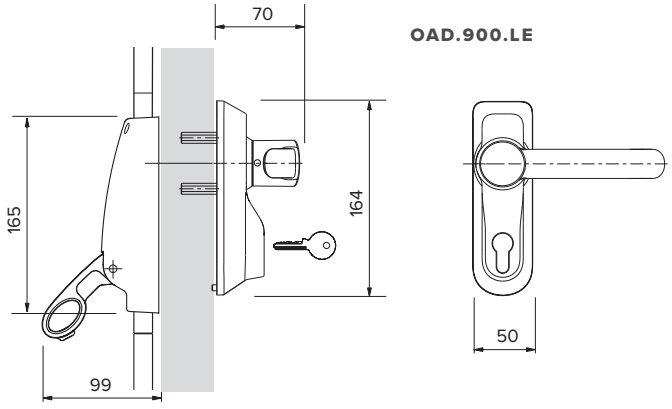

OAD.900.KE

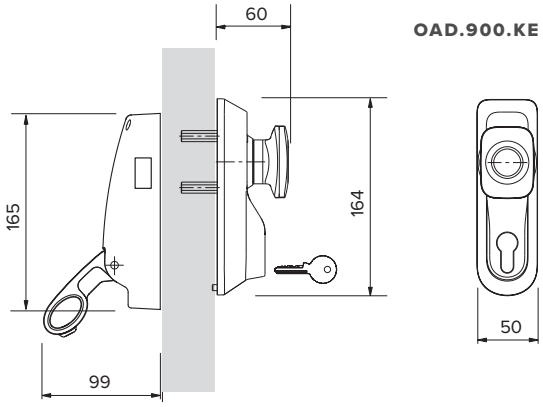

9260

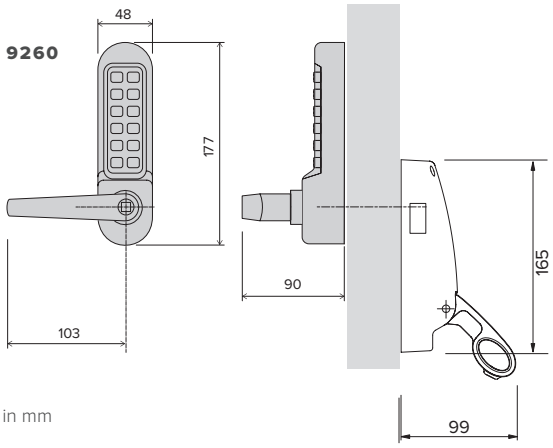

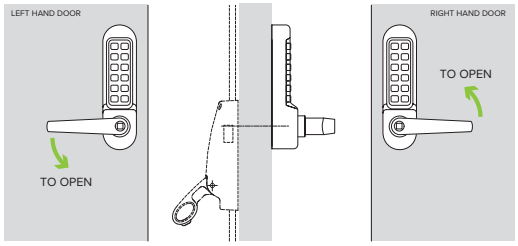

** NOTE: When used in conjunction with Boss PH.901 or PH.906 exit hardware, the lever operation of the Boss 9260 cannot be reversed.

Dimensions in mm

Boss Door Controls
3 & 4 Rutherford Square, Brucefield Industry Park,
Livingston, EH54 9BU

T: +44 (0) 1506 467 477
E: sales@bossdoorcontrols.co.uk

ALLEGION

www.bossdoorcontrols.co.uk

ISSUE DATE: March 2025

boss door controls

INSTALLATION AND MAINTENANCE

Panic and emergency exit hardware play a vital role in a building's escape route and it is important that these devices are installed, inspected and maintained regularly to ensure safety at all times.

Types of maintenance

Much of the routine maintenance recommended consists of a combination of visual and mechanical checks, cleaning and lubrication. Look out for the icons opposite which provide a 'quick glance' reminder of the maintenance required.

Exit hardware

All panic hardware installation will be operated by a horizontal "Push bar" or "Touch bar" which runs across the width of the door. The operating bar will be used to operate anything from a single rim latch to multipoint side or top/bottom latches.

Top and bottom latches on Boss PH.900 panic exit hardware are operated by solid rods which are connected to the operating bar.

INSTALLATION

Comprehensive installation instructions are provided with all Boss PH.900 Series exit devices. To maximise the efficiency and life cycle of these products it is important to follow the installation guidance carefully to achieve an accurate installation. To meet the European standard, the door and frame must be in a good condition, correctly hung and not distorted. We recommend verifying the door construction before installation to ensure it allows for the use of the device.

Visual checks

Primarily making a visual check on the product and surrounding door/frame looking for wear, damage, and general condition.



Functional checks

Consists of checking that the product operates properly without any binding or undue force required. Check that any seals or weatherstripping do not inhibit correct operation of the door.



Check fixings

Fixings need to be checked regularly and tightened when necessary. Check that no projection of fixings prevents the door from swinging freely.



Lubricating

Some products will benefit from periodic lubrication using a light machine oil or as instructed.



Cleaning

Build up of grease, dust and harmful chemicals should be removed to prevent corrosion and maintain the product finish.



MAINTENANCE AND CHECKING FUNCTION

In view of the important role the panic and emergency exit device plays in maintaining the safety and security of your building and its occupants, it is recommended that routine maintenance checks are carried out at intervals of not more than 1 month by the occupier or their approved representative.

Boss Door Controls
3 & 4 Rutherford Square, Brucefield Industry Park,
Livingston, EH54 9BU

T: +44 (0) 1506 467 477
E: sales@bossdoorcontrols.co.uk

ALLEGION

www.bossdoorcontrols.co.uk

ISSUE DATE: March 2025

boss door controls

EXIT HARDWARE MAINTENANCE

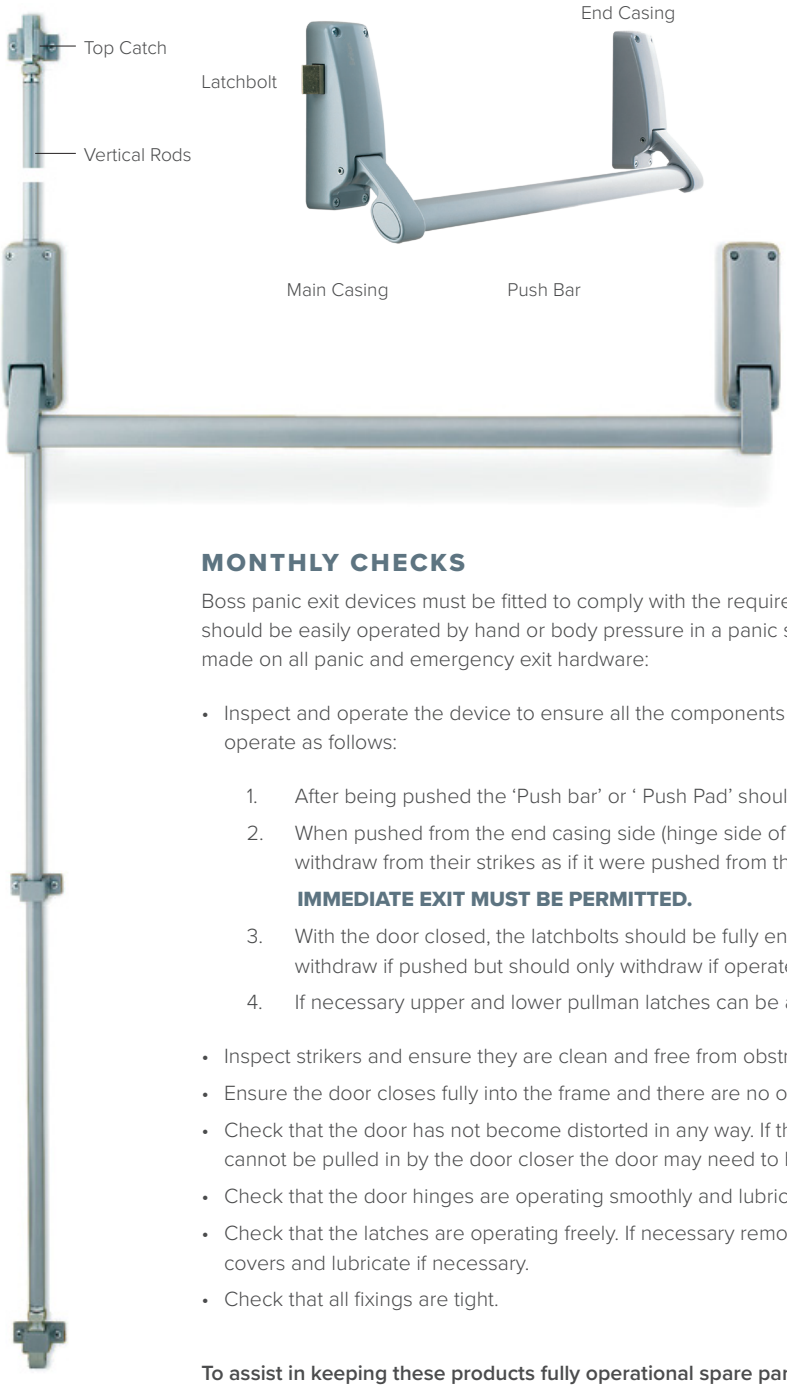

MONTHLY CHECKS

Boss panic exit devices must be fitted to comply with the requirements of EN 1125 which states that the device should be easily operated by hand or body pressure in a panic situation. We suggest the following checks be made on all panic and emergency exit hardware:

- Inspect and operate the device to ensure all the components are in satisfactory working condition and operate as follows:

    1. After being pushed the 'Push bar' or ' Push Pad' should return automatically to its initial position.
    2. When pushed from the end casing side (hinge side of door) the latchbolt(s) should completely withdraw from their strikes as if it were pushed from the main casing side.

       IMMEDIATE EXIT MUST BE PERMITTED.
    3. With the door closed, the latchbolts should be fully engaged into their strikers. They should not withdraw if pushed but should only withdraw if operated by the 'Push bar'.
    4. If necessary upper and lower pullman latches can be adjusted to ensure the accuracy of latching.

- Inspect strikers and ensure they are clean and free from obstruction.
- Ensure the door closes fully into the frame and there are no obstructions.
- Check that the door has not become distorted in any way. If the door does not meet the frame stops and cannot be pulled in by the door closer the door may need to be replaced.
- Check that the door hinges are operating smoothly and lubricate if necessary.
- Check that the latches are operating freely. If necessary remove the end box covers and/or pullman latch covers and lubricate if necessary.
- Check that all fixings are tight.

To assist in keeping these products fully operational spare part kits are available.

If problems persist and for some reason the panic device does not operate properly, consult your approved supplier or contact the Allegion Customer Care Team on 0330 8080 617

Boss Door Controls
3 & 4 Rutherford Square, Brucefield Industry Park,
Livingston, EH54 9BU
T: +44 (0) 1506 467 477
E: sales@bossdoorcontrols.co.uk

ALLEGION

www.bossdoorcontrols.co.uk

ISSUE DATE: March 2025