boss door controls

TS7.004 EN 3- 4

ALLEGION™

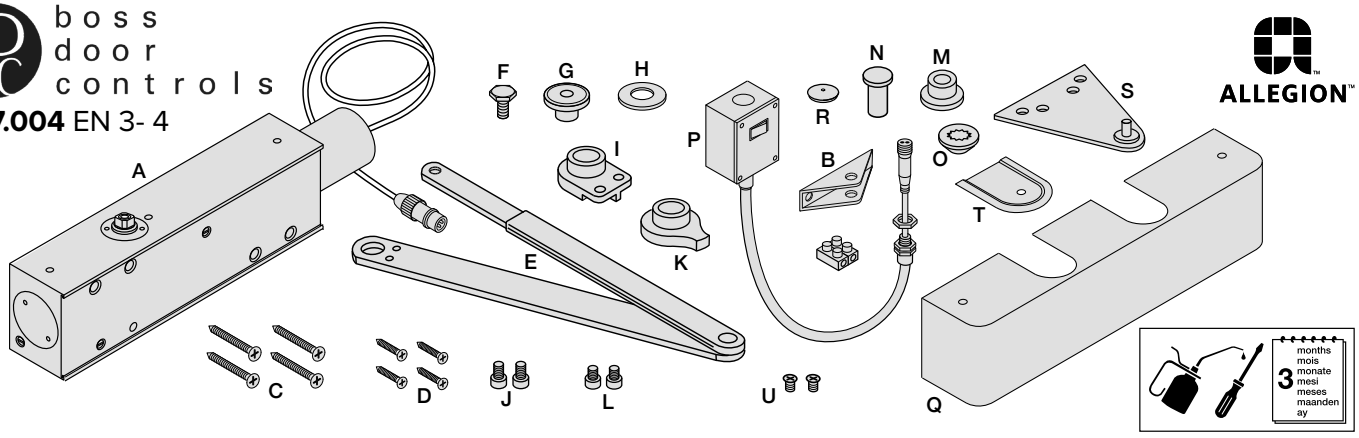

1R

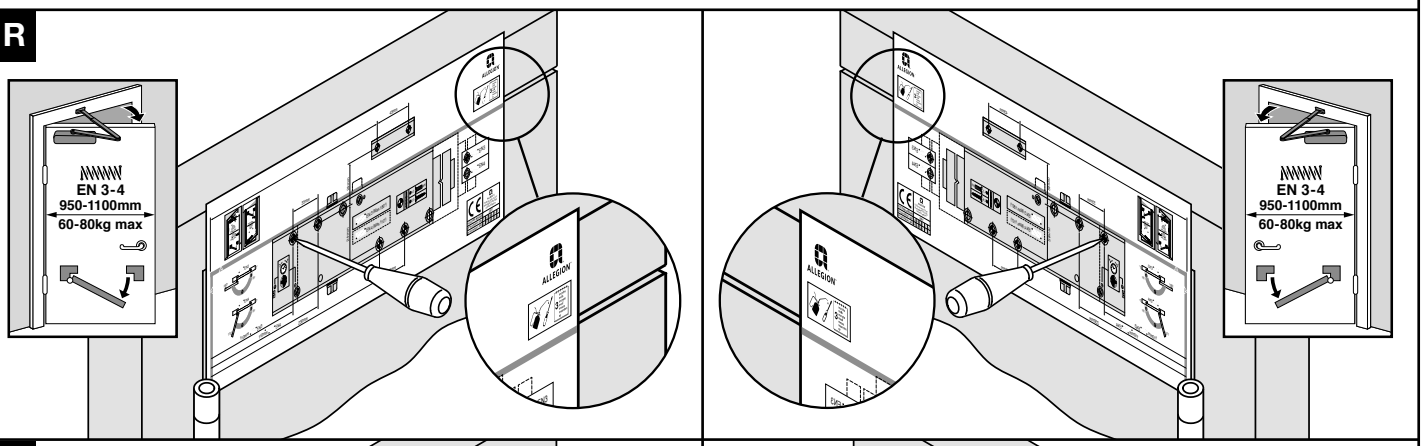

2R

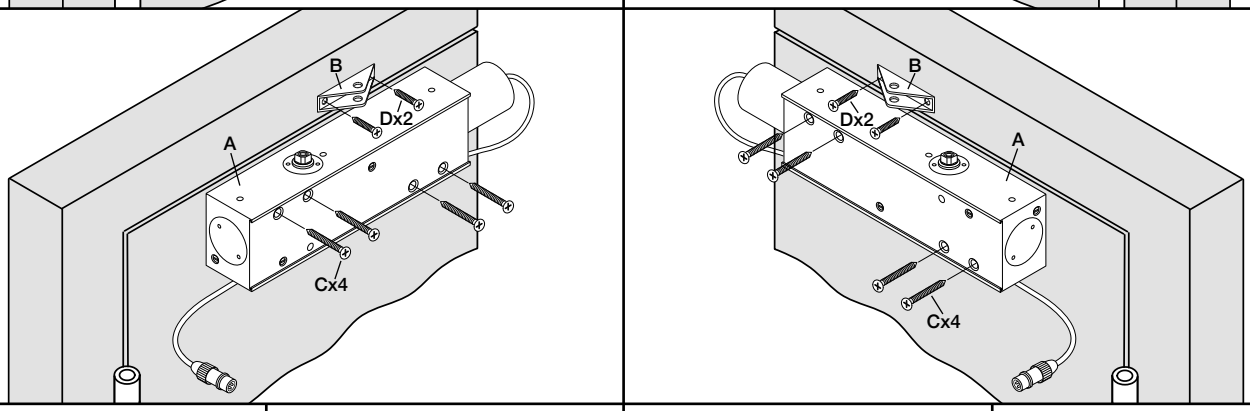

3R

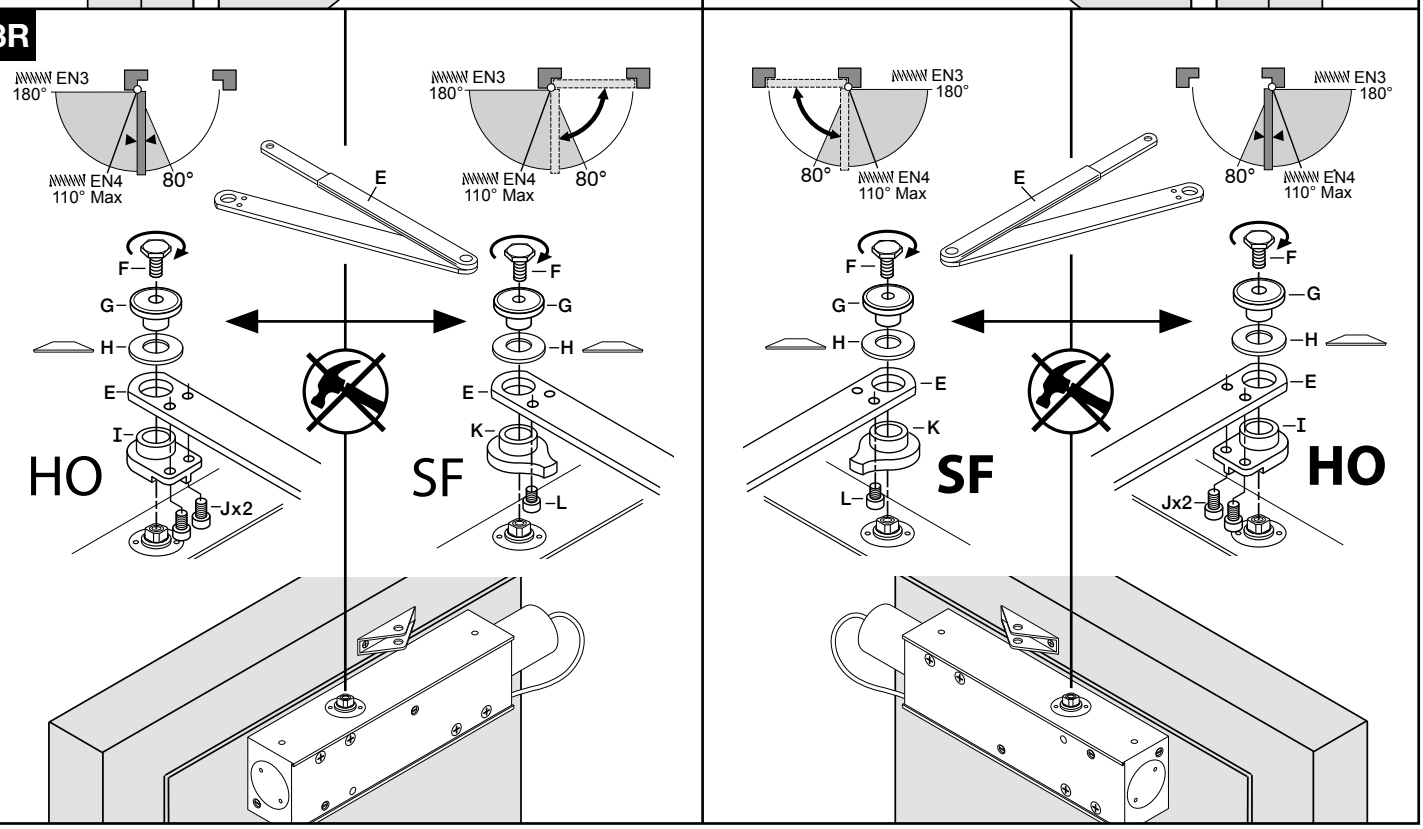

4R

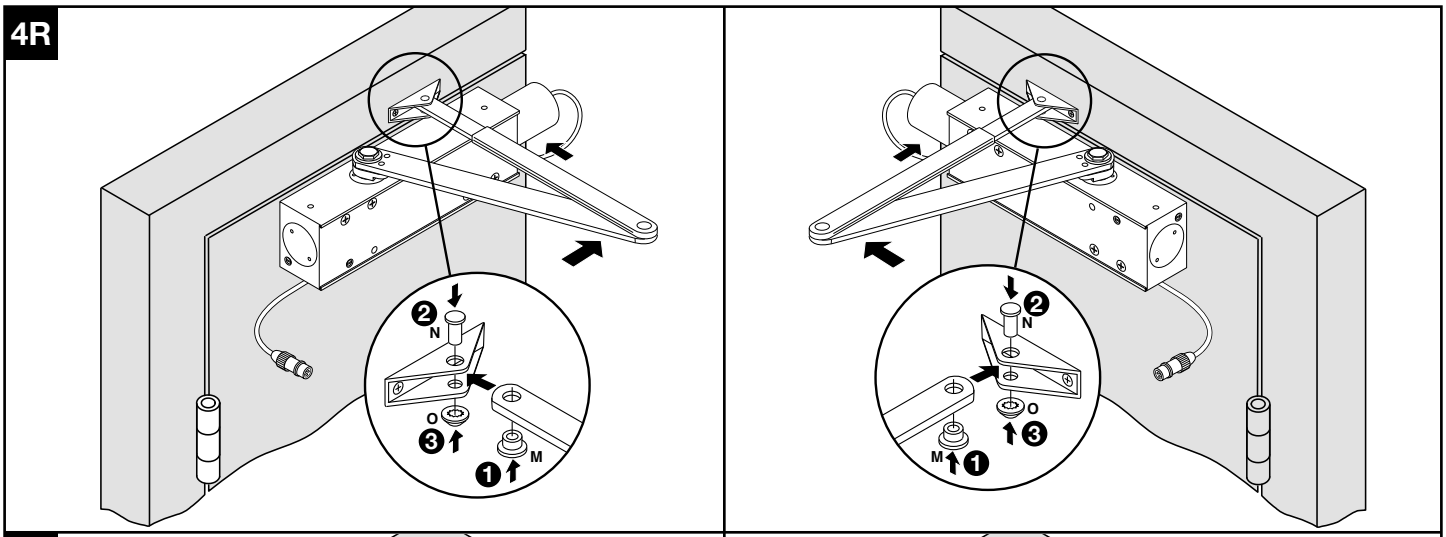

5R

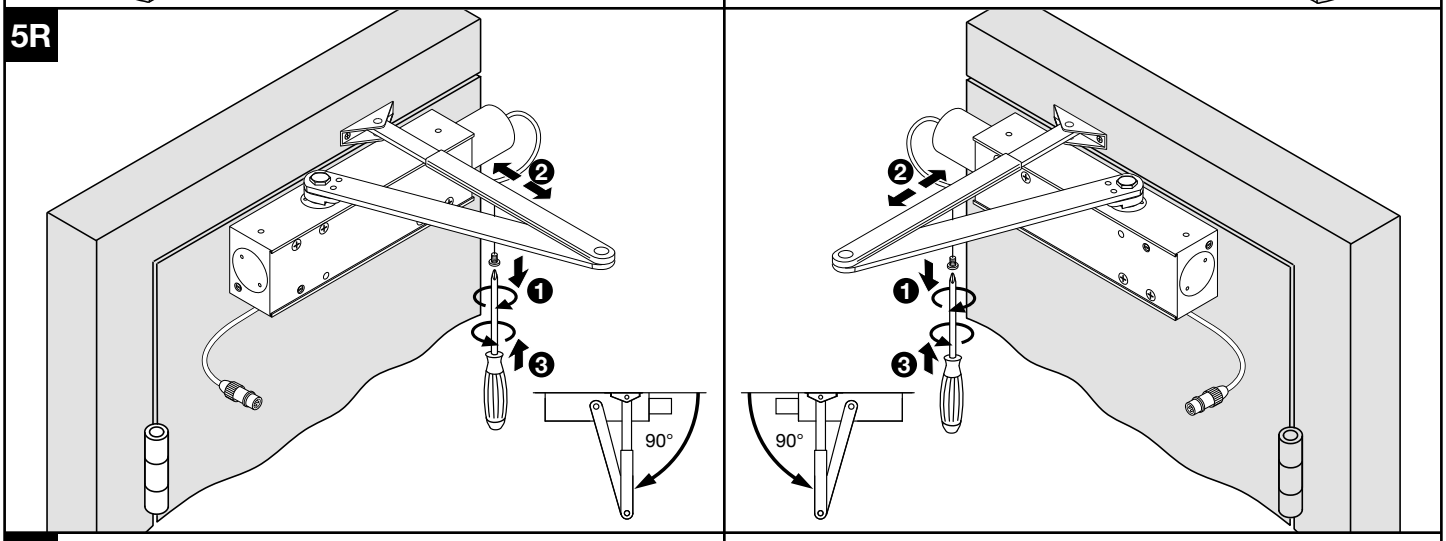

6R

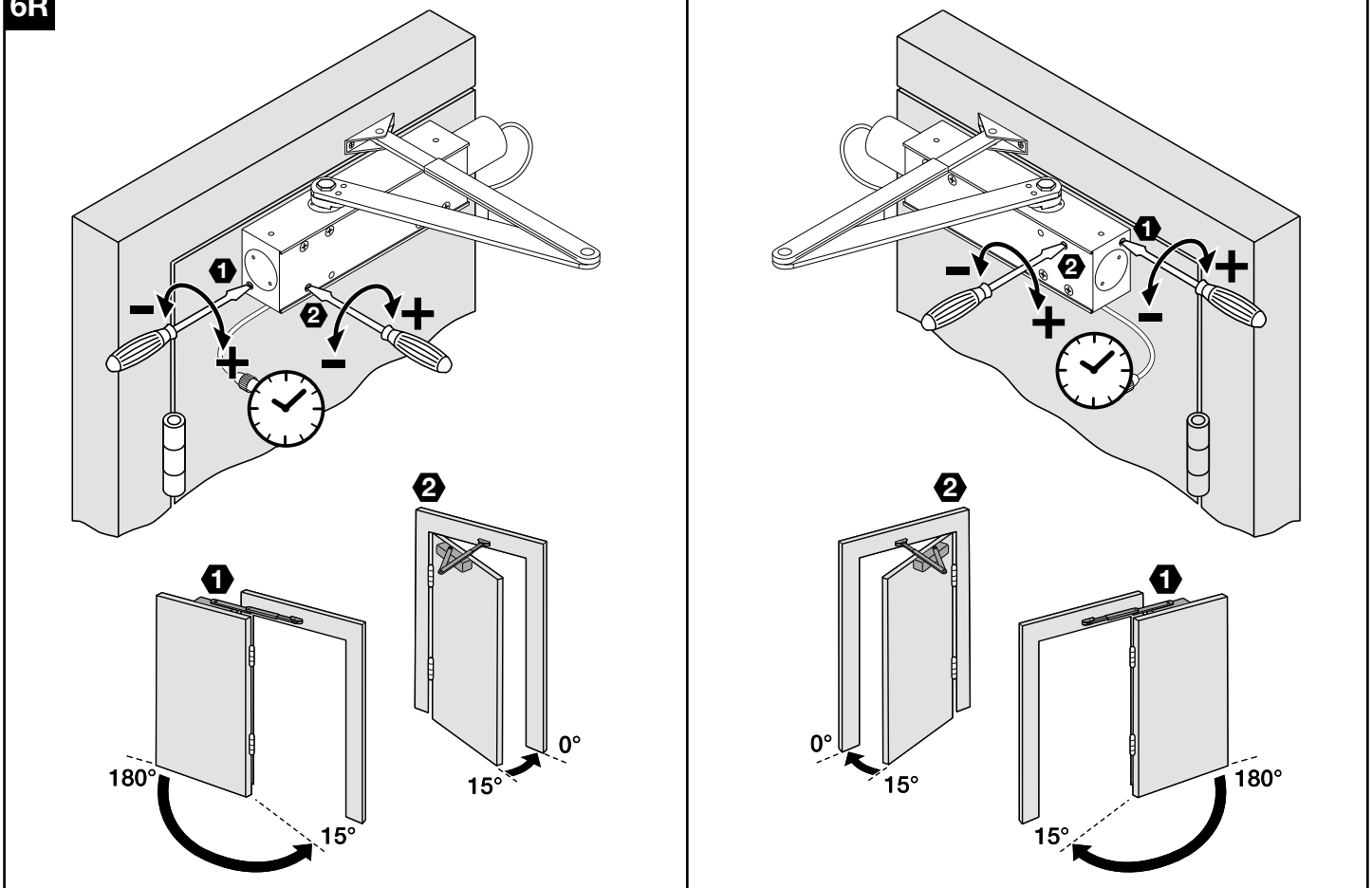

7

1T

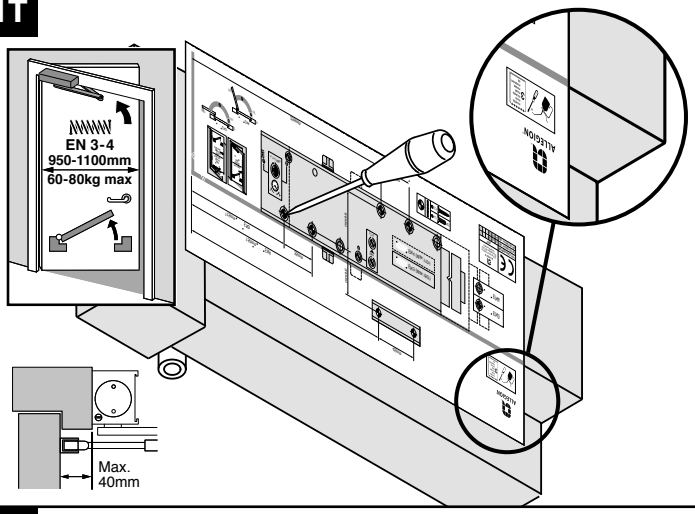
EN 3-4
950-1100mm
60-80kg max
Max.
40mm

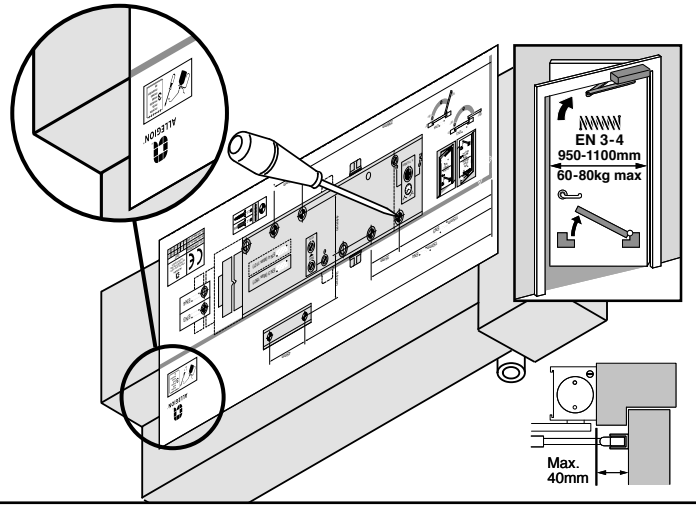
EN 3-4
950-1100mm
60-80kg max
Max.
40mm

2T

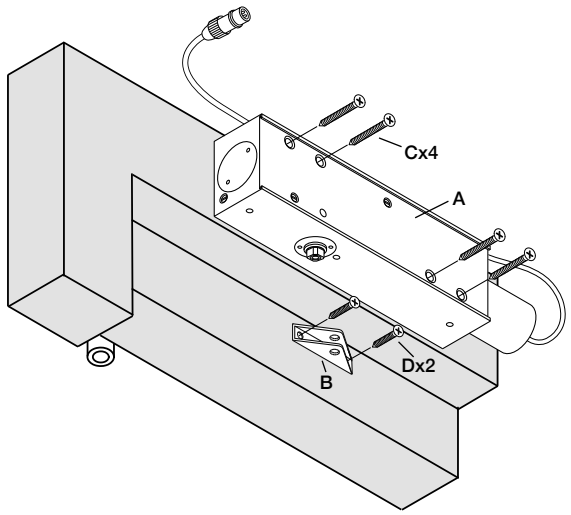
Cx4
A
B
Dx2

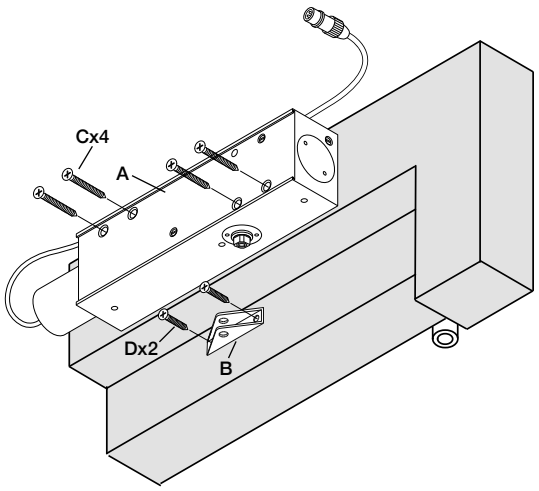
Cx4
A
Dx2
B

3T

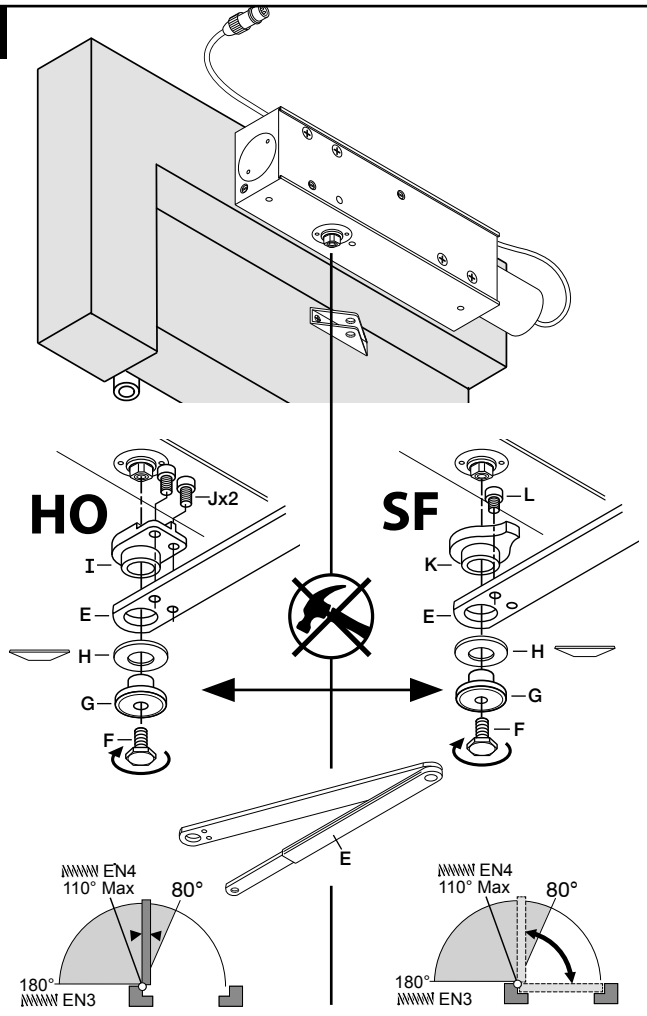
HO
Jx2
I
E
H
G
F
SF
L
K
E
H
G
F
E
EN4
110° Max
80°
180°
EN3
EN4
110° Max
80°
180°
EN3

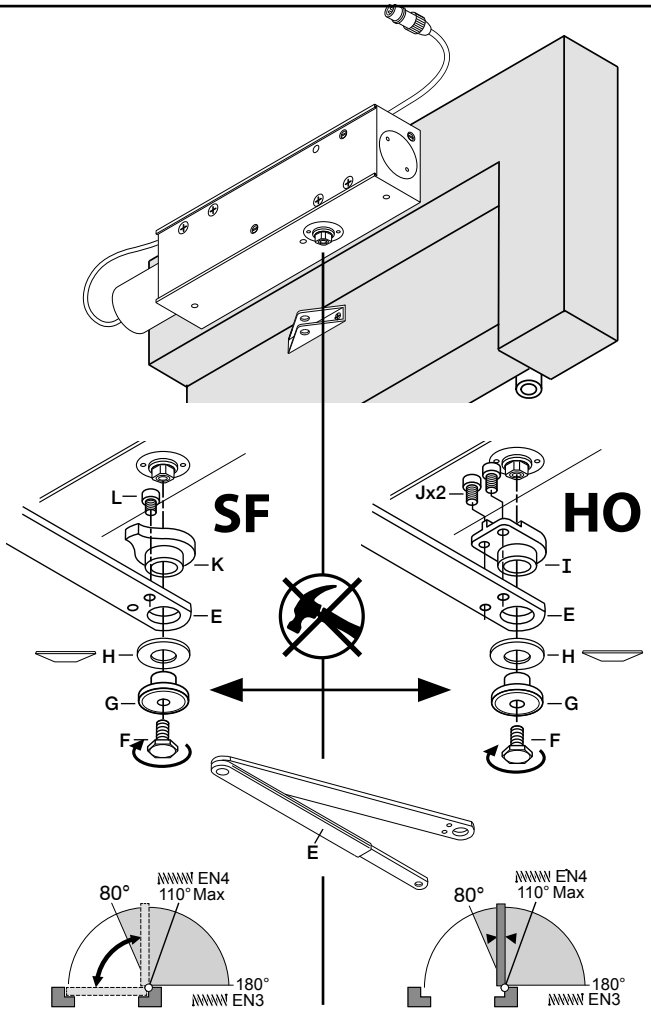
L
SF
K
E
H
G
F
Jx2
HO
I
E
H
G
F
E
80°
EN4
110° Max
180°
EN3
80°
EN4
110° Max
180°
EN3

4T

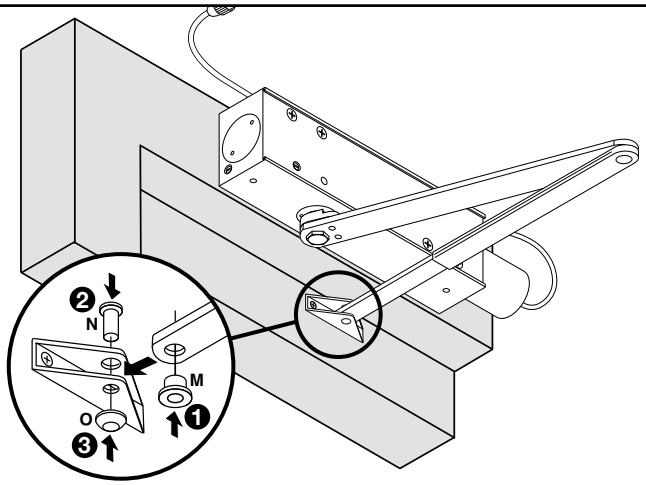

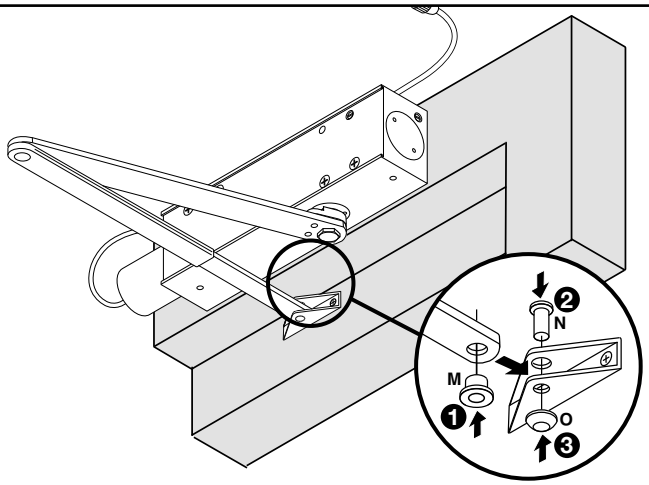

5T

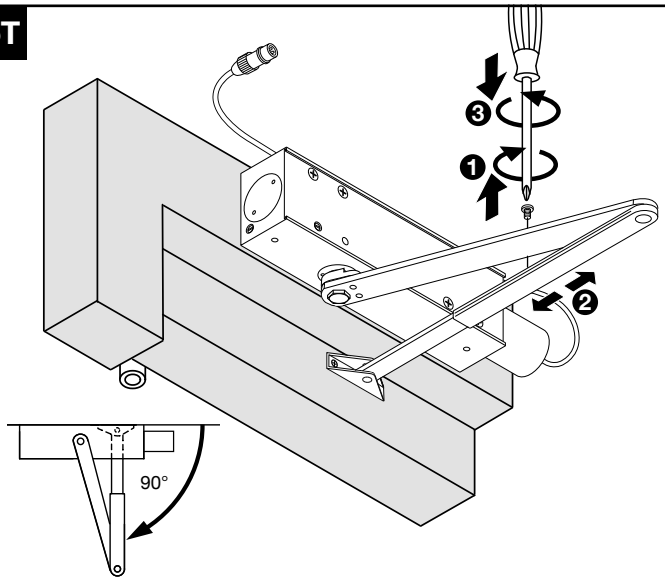

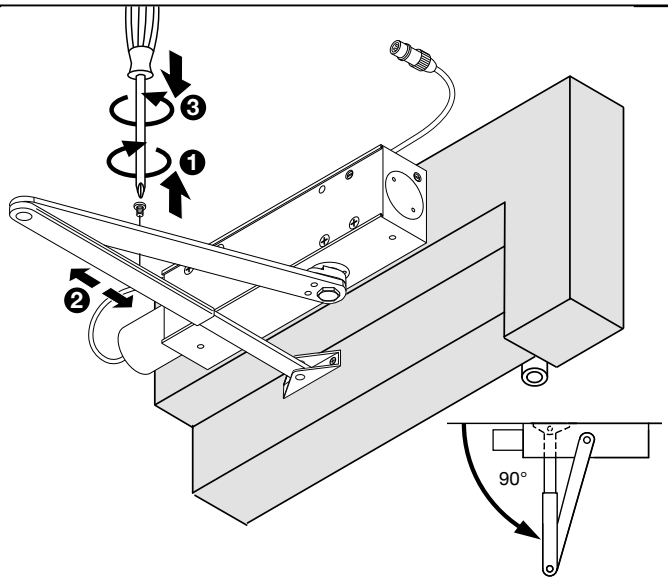

6T

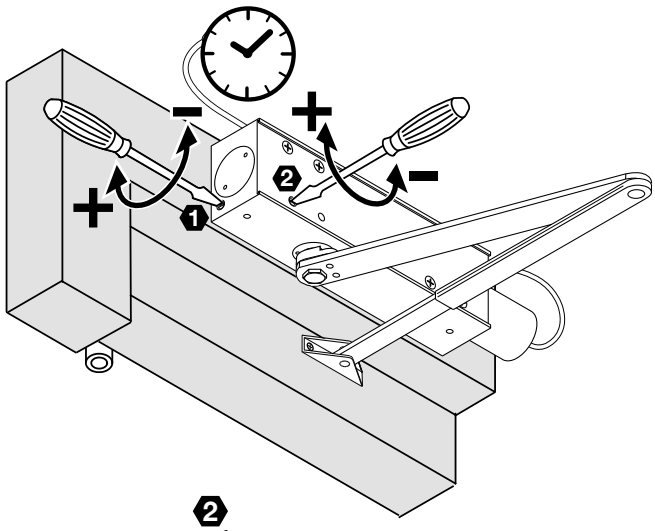

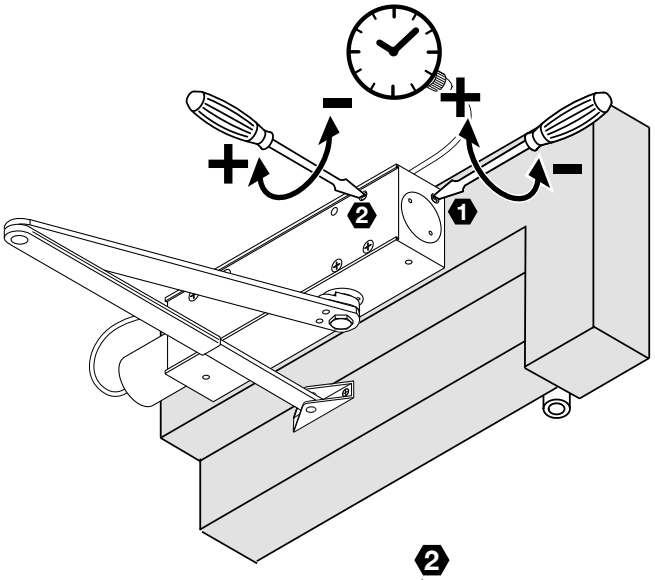

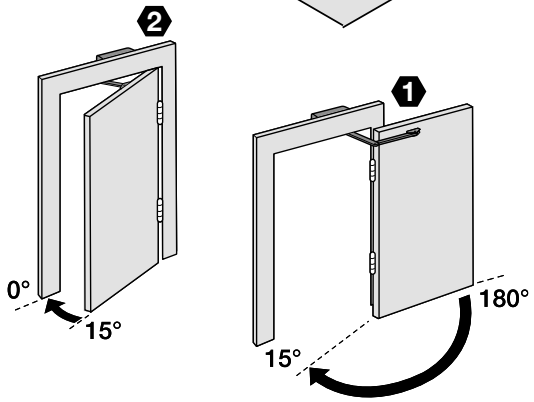

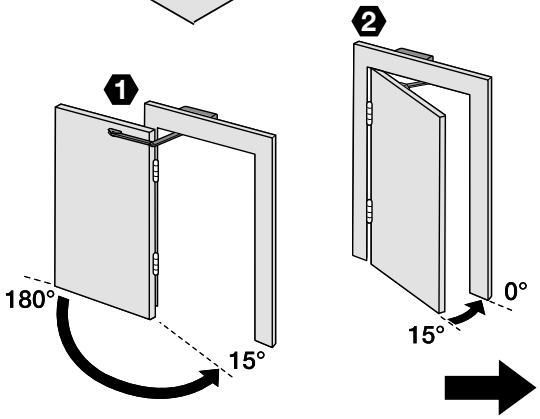

7

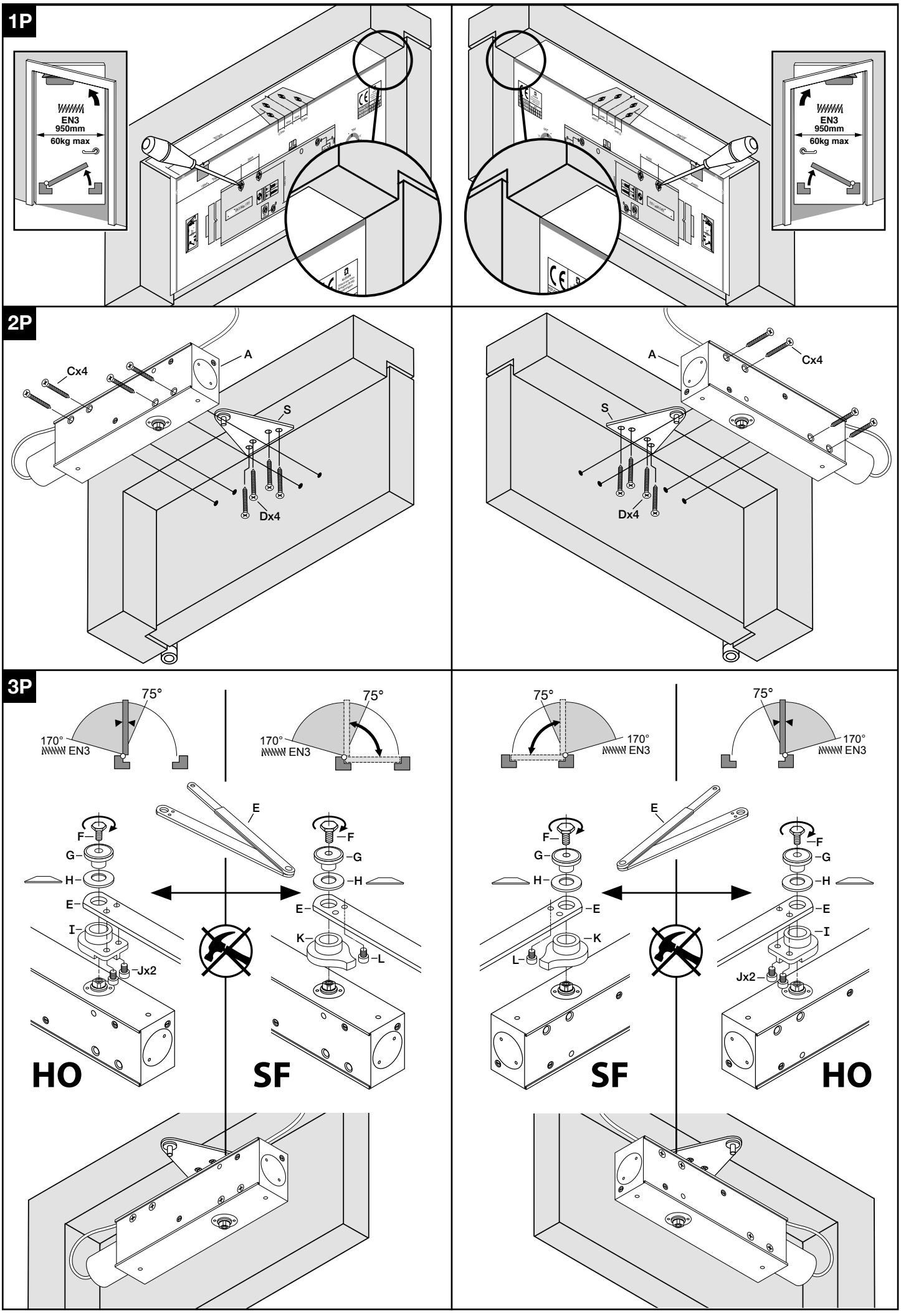
1P
EN3
950mm
60kg max
2P
A
Cx4
S
Dx4
3P
75°
170°
EN3
E
F
G
H
E
I
Jx2
K
L
HO
SF

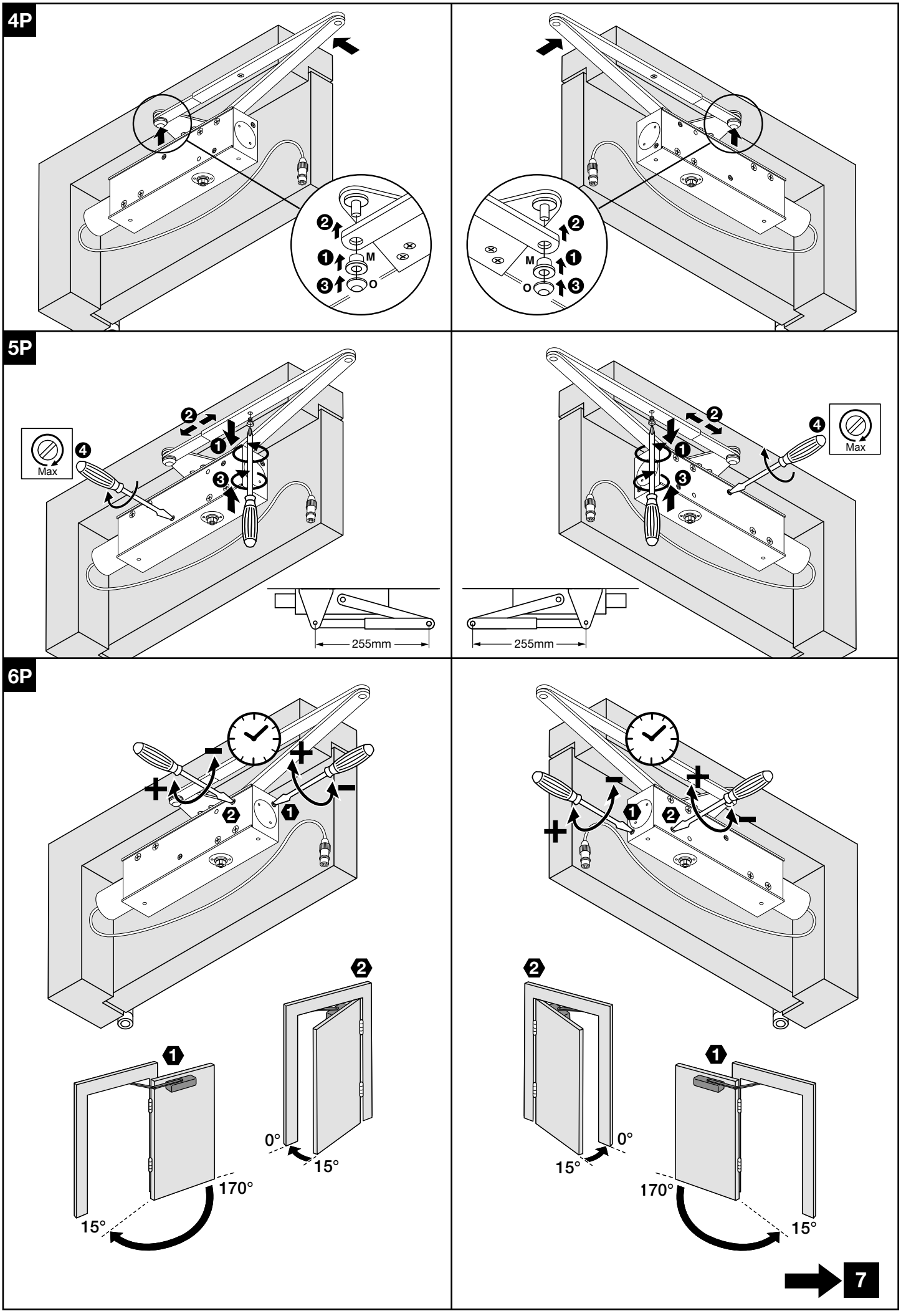

7

7

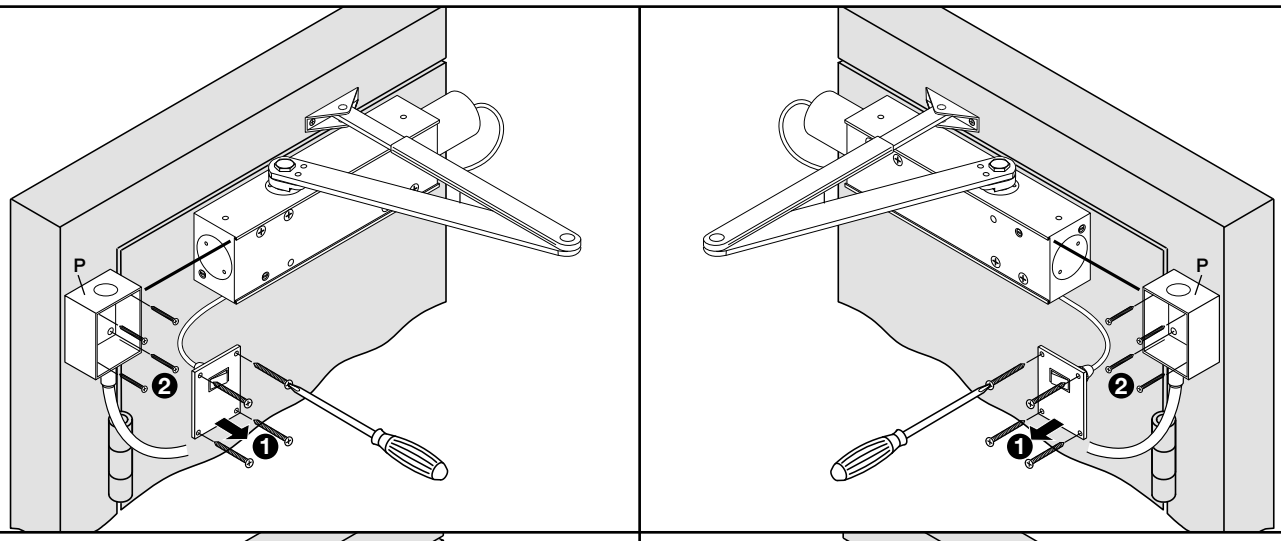

8

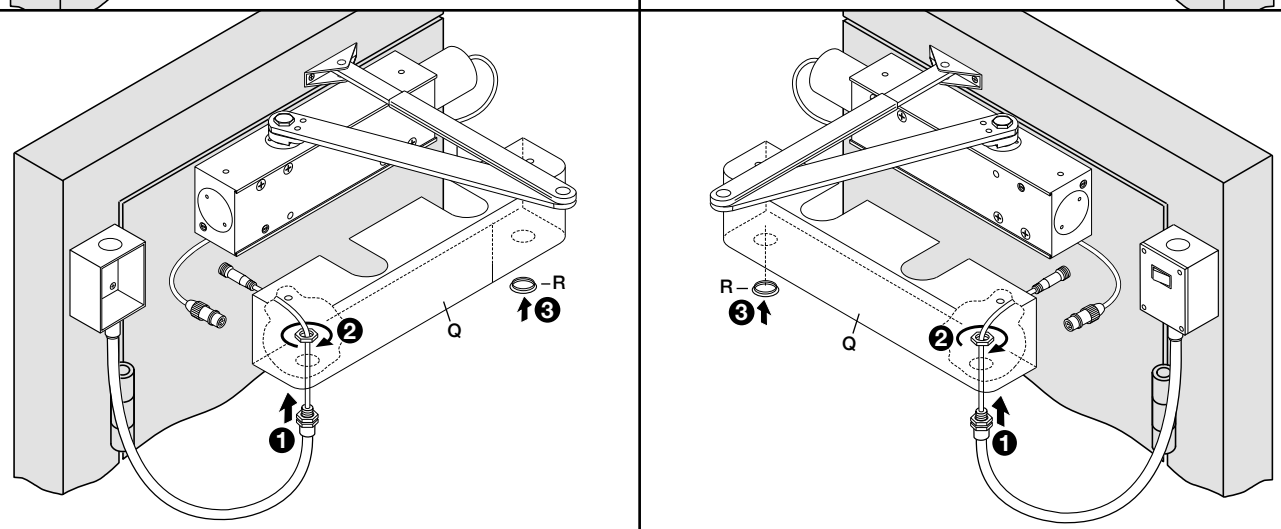

9

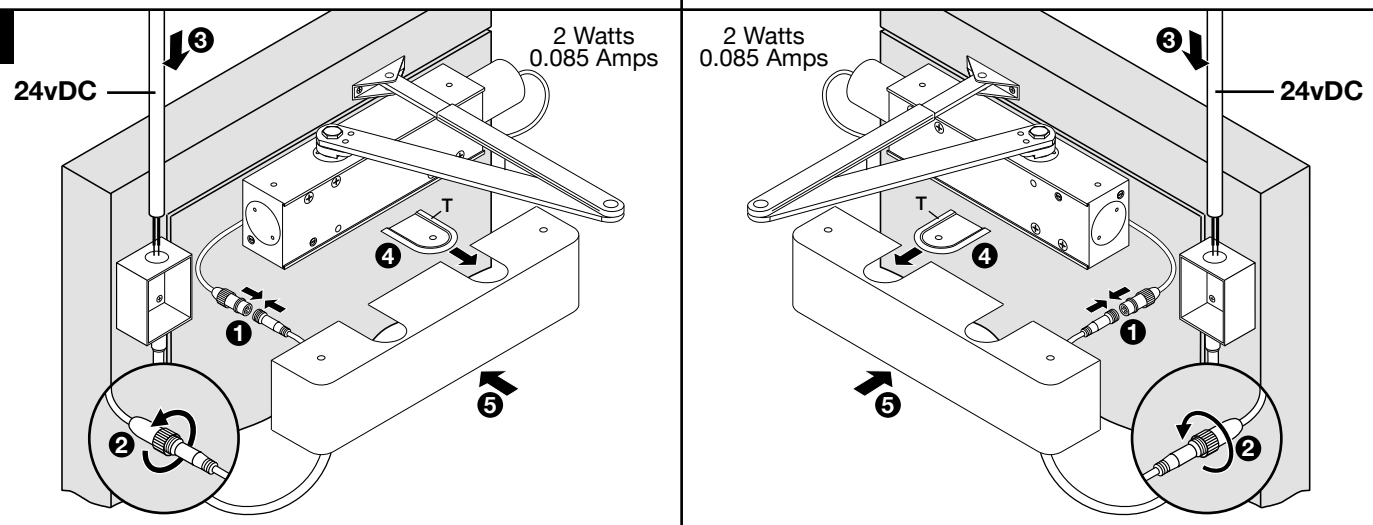

10

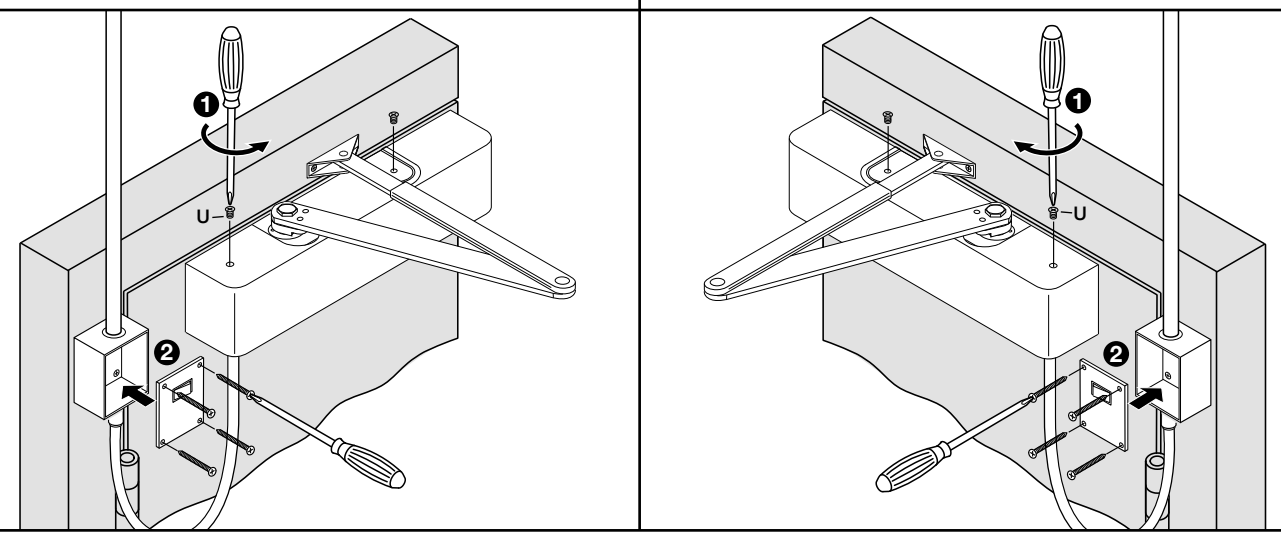

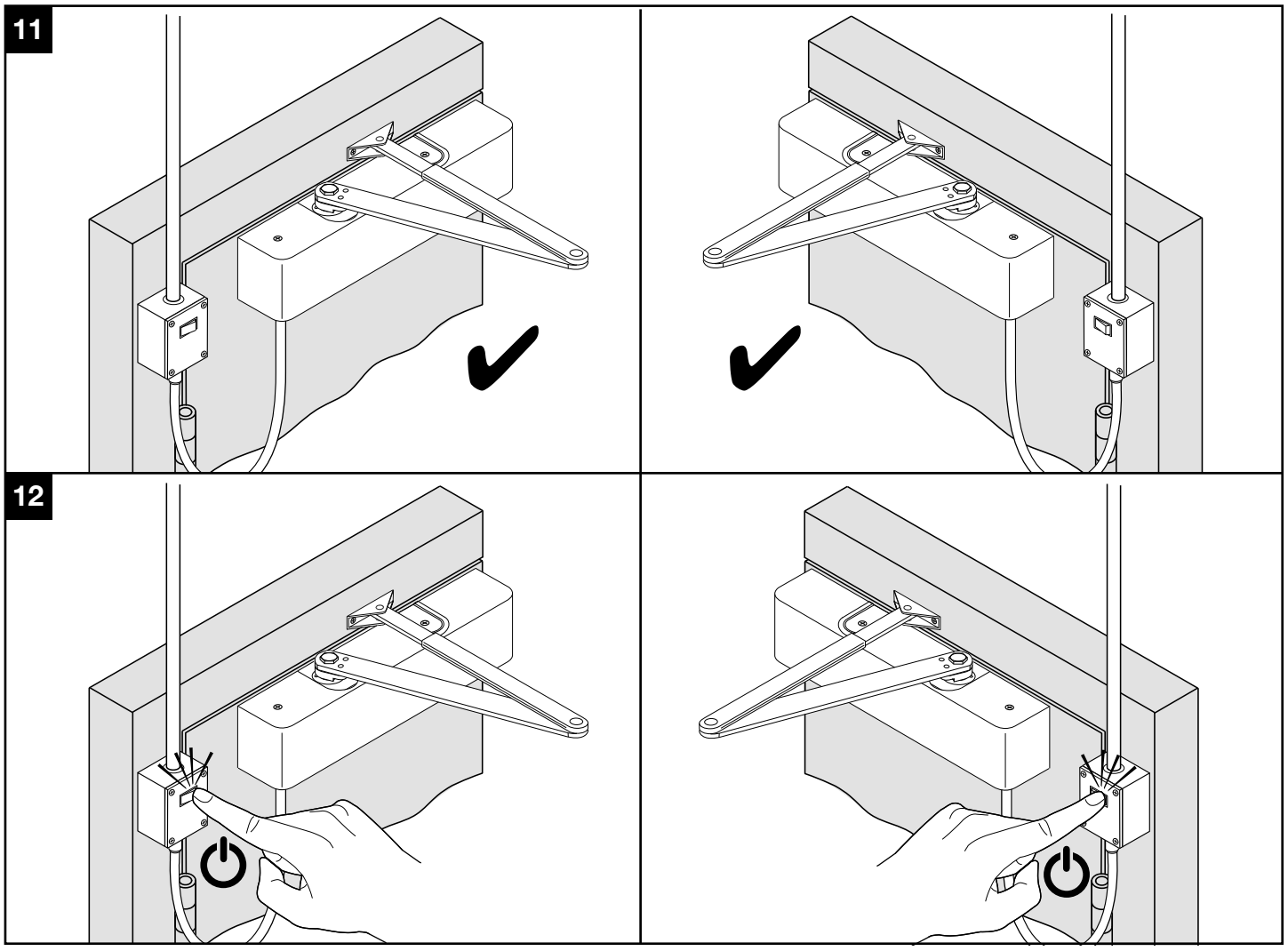

CE	ALLEGION™ Orbital 60, Dumers Lane, Bury, BL9 9UE United Kingdom					
2812-CPR-AE5012	17					
EN 1154:1996+A1: 2002	3	8	3/4	1	1	3
EN 1155:1996+A1: 2002	3	8	3/4	1	1	3
UKCA	1121-CPR-UK- AE7885					
	24					

certifire
CF 5023

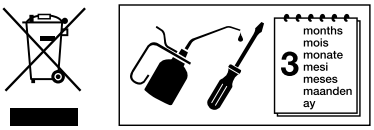

Periodically apply light oil to the arm knuckle joint and check all screws and the pinion bolt are tight.

ALLEGION™