boss door controls

DOOR CONTROLS
OVERHEAD DOOR CLOSERS

TS6.SA-EMF ELECTROMAGNETIC OVERHEAD CLOSER

INTRODUCTION

Boss TS6.SA-EMF is an electromagnetic door closer hardwired into the building's alarm system. Designed to hold open the door during normal use and deactivate and release the door in a controlled manner upon the sounding of the fire alarm or in the event of power failure. It is particularly suitable for use in areas where a standard door closer could be an inconvenience and impede the flow of people such as a cinema foyer, hospital or school corridor.



FEATURES & FUNCTIONS

- TS6.25BCDA series spring adjustable size EN 2-5 door mount pull and door mount push
- TS6.24BC series spring adjustable size EN 2-4 door mount pull and door mount push
- CE marked for door mount push and pull applications
- Satisfies the requirements of Approved Document M
- Designed for use on low voltage circuits 24V DC 1.4W and 58mA linked to a fire alarm
- Track mounted with an effective and reliable electromagnetic holding force
- Manual override allows the door to be pulled closed at any time
- Fully adjustable electro hold-open angle from 120 degrees
- Suitable for fire door applications
- Electromagnetic hold-open in the track with on-board test switch to simulate alarm activation
- Track supplied in matching finish to body or cover
- Recommended for use with regulated TS7/2 and TS7/4 power supply units

CERTIFICATION

- CE Marked to EN1154 (2812-CPR-AD0264) and EN 1155 (2812-CPR-AE10495)
- Certifire Approved (CF738)
- Fire tested to EN 1634-1 for use on fire doors up to 120mins timber and 60mins steel
- For timber or steel fire doors please refer to the Certifire certificate for scope of approval
- Environmental Product Declaration in accordance with ISO 14025 & EN 15804
- DoP available at www.bossdoorcontrols.com/dop

Always refer to the certification page for up-to-date documentation

CE certifire

120 min TIMBER 60 min STEEL

EPD GUARANTEE 25 years GUARANTEE 2 years

Boss Door Controls
3 & 4 Rutherford Square, Brucefield Industry Park,
Livingston, EH54 9BU

T: +44 (0) 1506 467 477
E: boss.sales@allegion.com

ALLEGION

bossdoorcontrols.com

ISSUE DATE: June 2025

boss door controls

TS6.SA-EMF ELECTROMAGNETIC OVERHEAD CLOSER

PRODUCT FEATURES	PRODUCT REFERENCES			
	TS6.241BC	**TS6.246BC**	**TS6.251BCDA**	**TS6.256BCDA**
Closer Type	Electromagnetic hold-open	Electromagnetic hold-open	Electromagnetic hold-open	Electromagnetic hold-open
Pull side door mount	■		■	
Push side door mount		■		■
Variable closing power EN size	2-4	2-4	2-5	2-5
Door limits (width/weight)	1100mm / 80kg	1100mm / 80kg	1250mm / 100kg	1250mm / 100kg
FAST power adjust dial			■	■
Maximum hold-open angle of opening	180	120	180	120
Adjustable manual release force	40Nm - 120Nm	40Nm - 120Nm	40Nm - 120Nm	40Nm - 120Nm
Closing speed & latch action adjustment	■	■	■	■
Operating Voltage and power imput	24Vdc 1.4W 58mA	24Vdc 1.4W 58mA	24Vdc 1.4W 58mA	24Vdc 1.4W 58mA
Finishes available (Additional RAL finishes on request)	SSS, SIL, PB, PSS, MB plus 7 metallic finishes	SSS, SIL, PB, PSS, MB plus 7 metallic finishes	SSS, SIL, PB, PSS, MB plus 7 metallic finishes	SSS, SIL, PB, PSS, MB plus 7 metallic finishes
CE Classification	3 5 4/2 1 1 3	3 5 4/2 1 1 3	3 5 5/2 1 1 3	3 5 5/2 1 1 3

■ Standard.

□ Available as an option/variant.

FINISHES

All finish variants are supplied with matching cover and slide channel assembly

Standard Finishes



Silver SIL | Satin Stainless SSS | Polished Stainless PSS | Polished Brass PB | Matt Black MB

Additional Metallic Finishes



Light Bronze BRZ-L | Mid Bronze BRZ-M | Dark Bronze BRZ-D | Matt Bronze BRZ-MATT | Satin Brass SB | Satin Copper COP-S | Antique Brass AB

For illustrative purposes only. Please refer to colour swatches.

Boss Door Controls
3 & 4 Rutherford Square, Brucefield Industry Park,
Livingston, EH54 9BU

T: +44 (0) 1506 467 477
E: boss.sales@allegion.com

ISSUE DATE: June 2025

ALLEGION

bossdoorcontrols.com

boss door controls

TS6.SA-EMF ELECTROMAGNETIC OVERHEAD CLOSER

TS6.241BC
Door mount pull side
Max. opening angle 180˚

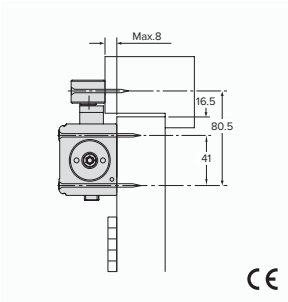



TS6.246BC
Door mount push side
Max. opening angle 120˚

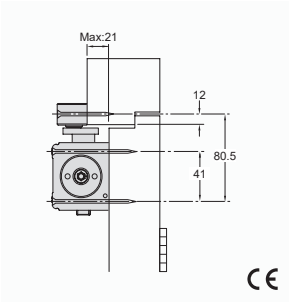



TS6.251BCDA
Door mount pull side
Max. opening angle 180˚

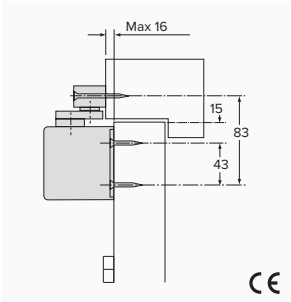



TS6.256BCDA
Door mount push side
Max. opening angle 120˚

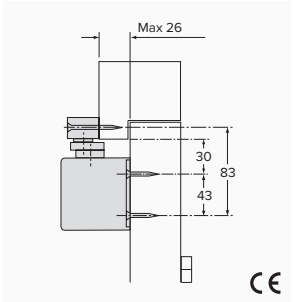



Boss Door Controls
3 & 4 Rutherford Square, Brucefield Industry Park,
Livingston, EH54 9BU
T: +44 (0) 1506 467 477
E: boss.sales@allegion.com

ISSUE DATE: June 2025

ALLEGION

bossdoorcontrols.com

boss door controls

TS6.SA-EMF ELECTROMAGNETIC OVERHEAD CLOSER

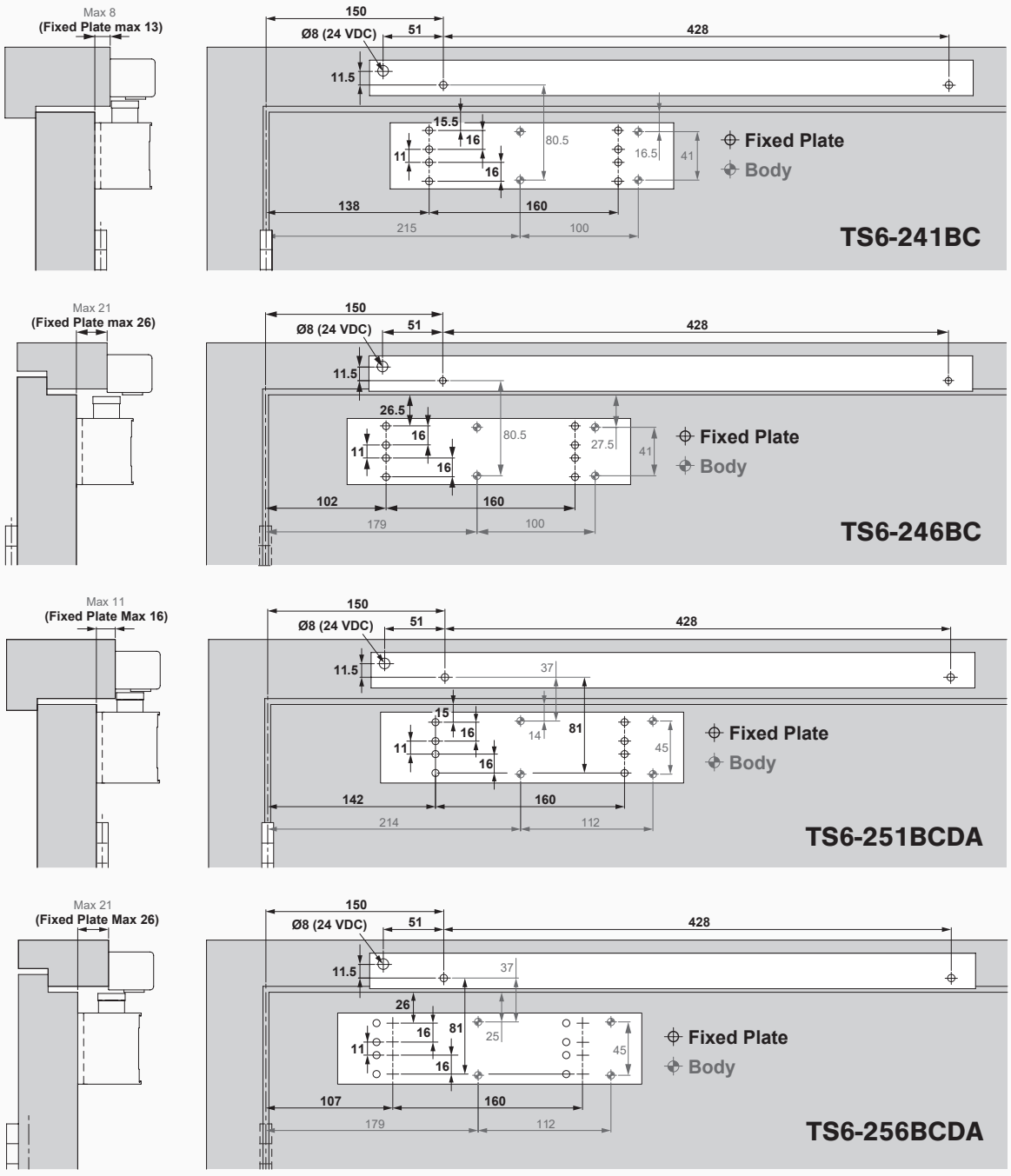

Dimensions in mm

Boss Door Controls
3 & 4 Rutherford Square, Brucefield Industry Park,
Livingston, EH54 9BU

T: +44 (0) 1506 467 477
E: boss.sales@allegion.com

ALLEGION
bossdoorcontrols.com

ISSUE DATE: June 2025

boss door controls

TS6.SA-EMF ELECTROMAGNETIC OVERHEAD CLOSER

TS6.24BC ADJUSTMENT

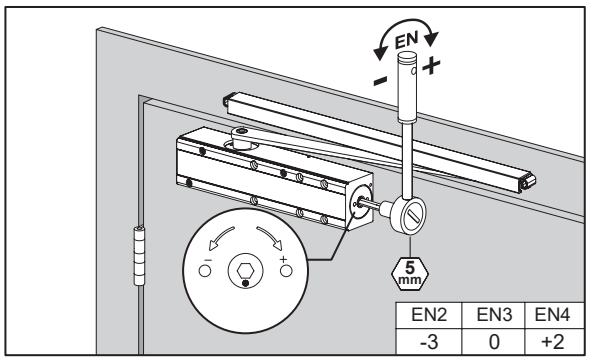

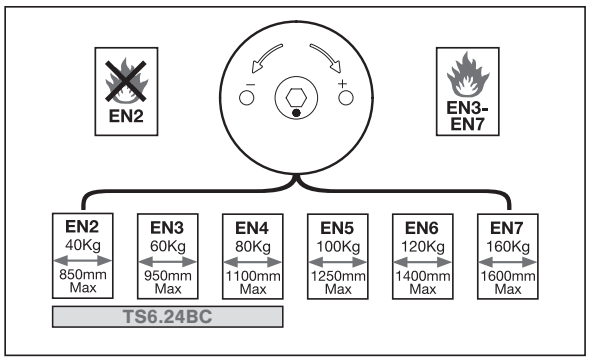

POWER SIZE

These images determine the power size and the number of turns you have to complete to adjust.

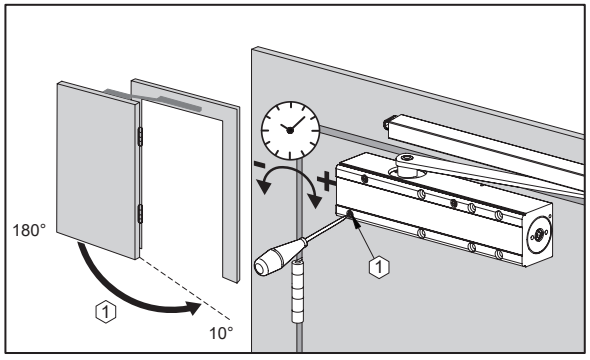

CLOSING SPEED

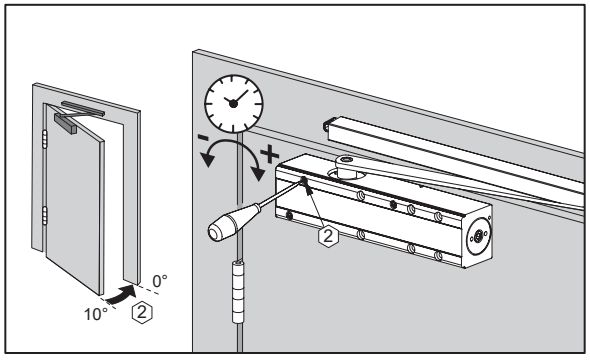

LATCH ACTION SPEED

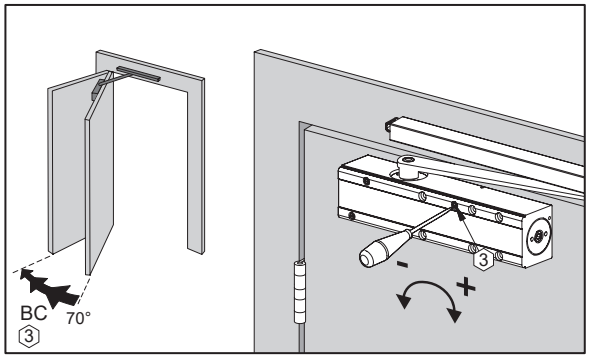

BACKCHECK ADJUSTMENT

Boss Door Controls
3 & 4 Rutherford Square, Brucefield Industry Park,
Livingston, EH54 9BU
T: +44 (0) 1506 467 477
E: boss.sales@allegion.com

ISSUE DATE: June 2025

ALLEGION

bossdoorcontrols.com

boss door controls

TS6.SA-EMF ELECTROMAGNETIC OVERHEAD CLOSER

TS6.25BCDA ADJUSTMENT

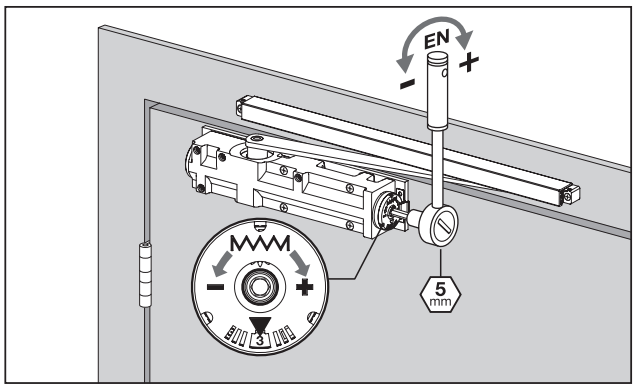

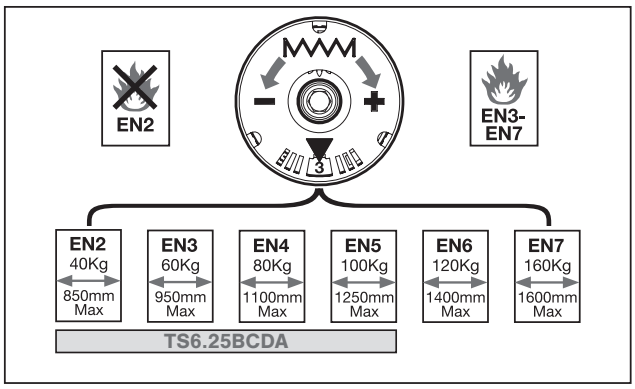

POWER SIZE

These images determine the power size and the number of turns you have to complete to adjust.

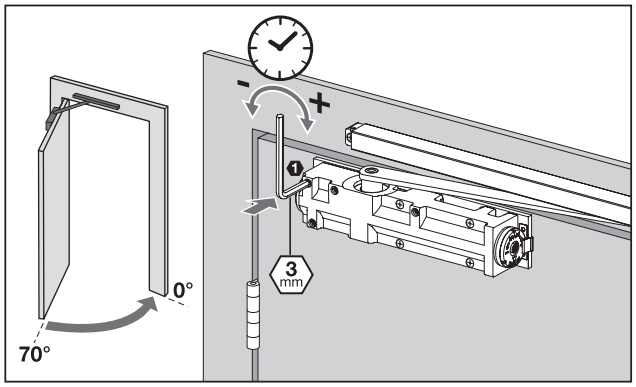

CLOSING SPEED

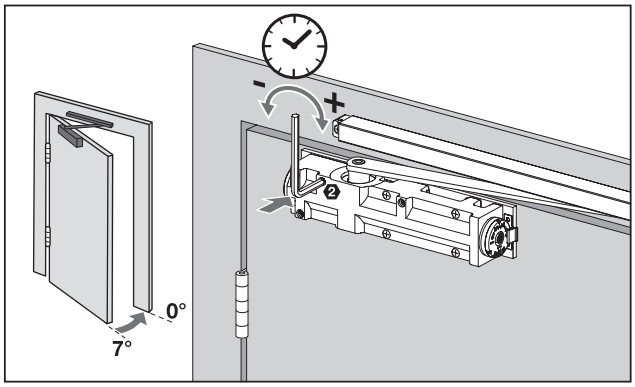

LATCH ACTION SPEED

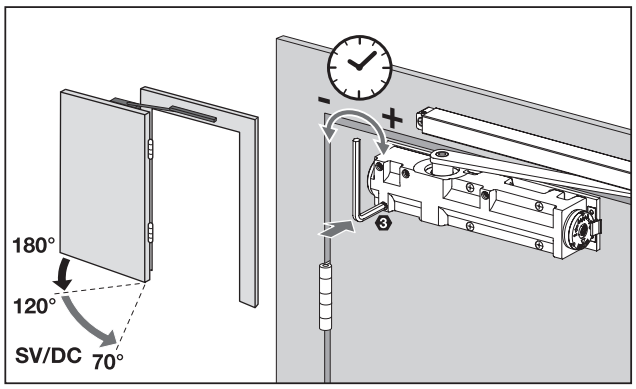

DELAYED ACTION

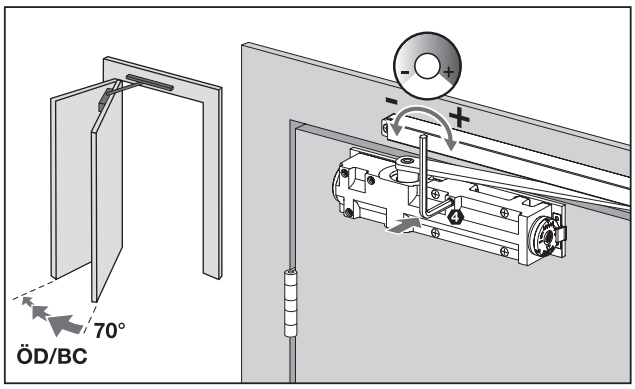

BACKCHECK ADJUSTMENT

Boss Door Controls
3 & 4 Rutherford Square, Brucefield Industry Park,
Livingston, EH54 9BU

T: +44 (0) 1506 467 477
E: boss.sales@allegion.com

ALLEGION

bossdoorcontrols.com

ISSUE DATE: June 2025

boss door controls

TS6.SA-EMF ELECTROMAGNETIC OVERHEAD CLOSER

ADJUSTMENT

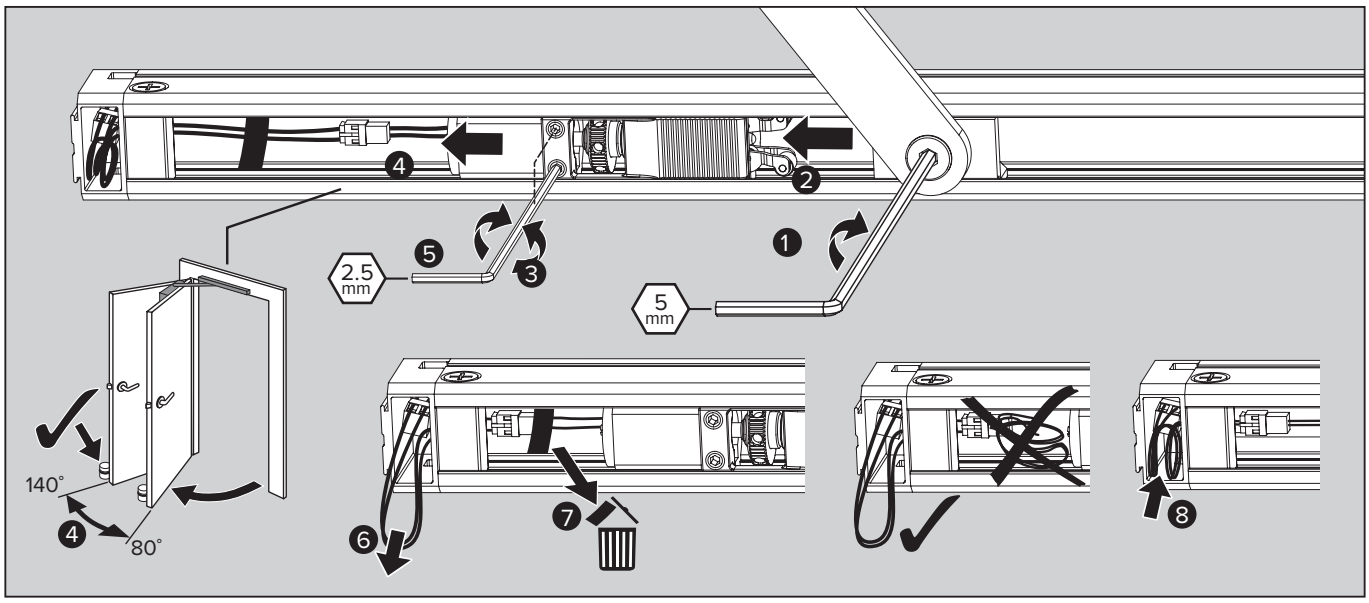

1. Connect the arm to the slider & tighten the arm bolt
2. Open the door to engage the arm into hold open
3. Undo the two hold open positioning screws
4. Open the door until the required hold open position is achieved
5. Tighten the two hold open positioning screws
6. Carefully pull the excess wire through the track
7. Remove the security tape
8. Carefully push the wire into the compartment

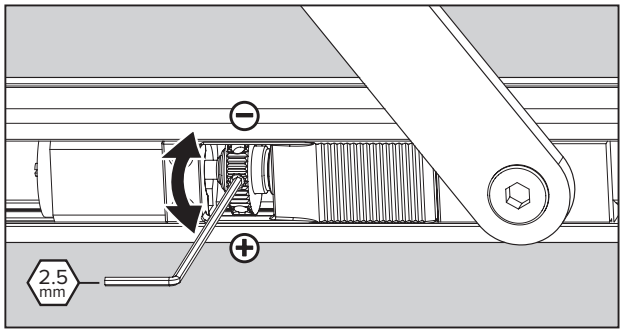

HOLD OPEN RELEASE FORCE

Boss Door Controls
3 & 4 Rutherford Square, Brucefield Industry Park,
Livingston, EH54 9BU

T: +44 (0) 1506 467 477
E: boss.sales@allegion.com

ALLEGION

bossdoorcontrols.com

ISSUE DATE: June 2025

boss door controls

GENERAL MAINTENANCE

Door controls

Allegion has identified that many problems associated with overhead door closers can be attributed directly to errors in installation rather than problems with the door closer itself. If the door is not closing properly into the frame you should first disconnect the door closer (disconnect the arm(s)) and determine that there is not an underlying problem with the door, frame or any smoke /draft seals that might be fitted.

PLEASE NOTE:

The power of the door closer should not be used to overcome problems associated with the door or other items of hardware fitted to it. Under no circumstances should the closer body be dismantled.

Types of maintenance

Much of the routine maintenance recommended consists of a combination of visual and mechanical checks, cleaning and lubrication. Look out for the icons opposite which provide a 'quick glance' reminder of the maintenance required.

Visual checks



Primarily making a visual check on the product and surrounding door/frame looking for wear, damage, and general condition.

Functional checks



Consists of checking that the product operates properly ensuring the door can fully close without any binding or undue force required. Check that any seals or weatherstripping do not inhibit correct operation of the door.

Check fixings



Fixings need to be checked regularly and tightened when necessary. Check that no projection of fixings prevents the door from swinging freely.

Lubricating



Some products will benefit from periodic lubrication using a light machine oil or as instructed.

Cleaning



Build up of grease, dust and harmful chemicals should be removed to prevent corrosion and maintain the product finish.

Boss Door Controls
3 & 4 Rutherford Square, Brucefield Industry Park,
Livingston, EH54 9BU
T: +44 (0) 1506 467 477
E: boss.sales@allegion.com

ISSUE DATE: June 2025

ALLEGION

bossdoorcontrols.com

boss door controls

CLOSER MAINTENANCE

WEEKLY CHECKS



Release the door from the fully open position and ensure that it closes fully into the frame. Ensure the latch (if fitted) engages fully into the strike plate. Repeat the process a few times from different angles of opening to ensure the door closes consistently each time.



Check and adjust the closing and latching speeds if necessary.

Check that the door or hardware does not come into contact with the door frame or the surrounding structure.

QUARTERLY CHECKS



- The fixings of the closer body and the bracket are subject to stress and should be checked carefully to make sure they are tight.



- Periodically apply a little light machine oil to the moving joints of the arm and bracket.



- Check any fire and smoke seals to ensure they do not foul the action of the door.
- Check for any loss of fluid from the door closer body which would indicate a failing device.



- Clean the closer body, arms and bracket if necessary.

FIRE DOOR APPLICATIONS

When installed as part of a fire precaution system the door closing mechanism, including the door selector if used on a double door arrangement, should be checked in accordance with standing periodic fire testing procedures.

Routinely check that all fixings of the closer body and bracket are tight.

Routine care of finishes as necessary.

Boss Door Controls
3 & 4 Rutherford Square, Brucefield Industry Park,
Livingston, EH54 9BU
T: +44 (0) 1506 467 477
E: boss.sales@allegion.com

ISSUE DATE: June 2025

ALLEGION

bossdoorcontrols.com

boss door controls

ELECTROMAGNETIC HOLD-OPEN MAINTENANCE

In situations where a fire door in a high traffic area is fitted with a door closer an electromagnetic hold-open device may be fitted which allows the door to be held open or allowed to swing free during normal use.



However, in the event of a fire, the electromagnetic hold-open device will be deactivated allowing the door to close under the action of the door closer.

- The system is powered by a 24v supply which is normally located close to the door either in the ceiling void or convenient cupboard
- The system must be connected to a separate smoke detection system and/or the building's fire alarm system

WEEKLY CHECKS



It is vitally important that the integrity of a fire door is maintained in the event of a fire. All electromagnetic hold-open devices and the ancillary equipment, including the transformer/ rectifier (power supply) must be tested weekly in accordance with the procedures set out in the fire precautions regulations.

It is recommended that the following procedure be followed:

- With the door in the hold-open position simulate the fire alarm activation and check that the door is released immediately and closes fully into the frame, fully engaging the latch if fitted. The fire alarm may be simulated in a number of ways including activation of a break glass unit or by a built-in test switch on the hold-open device.
- With the door in the hold-open position switch off the power to the hold-open devices to simulate power failure. The door should be released and close fully as above.
- With the door in the hold-open position check that the door can be pulled manually off the hold-open and close fully into the frame.

ANY FAILURE OF THE DOOR TO CLOSE MUST BE RECTIFIED IMMEDIATELY

Firstly check that the failure is due to the electromagnetic device failing to release or whether the closing mechanism failed to close the door properly for some reason.

Electronic failure should be checked by a qualified technician to determine the fault.

if the closer fails to close the door properly please refer to the Door Closer section of our 'Service and Maintenance Guide' for further information.

Boss Door Controls
3 & 4 Rutherford Square, Brucefield Industry Park,
Livingston, EH54 9BU
T: +44 (0) 1506 467 477
E: boss.sales@allegion.com

ISSUE DATE: June 2025

ALLEGION

bossdoorcontrols.com