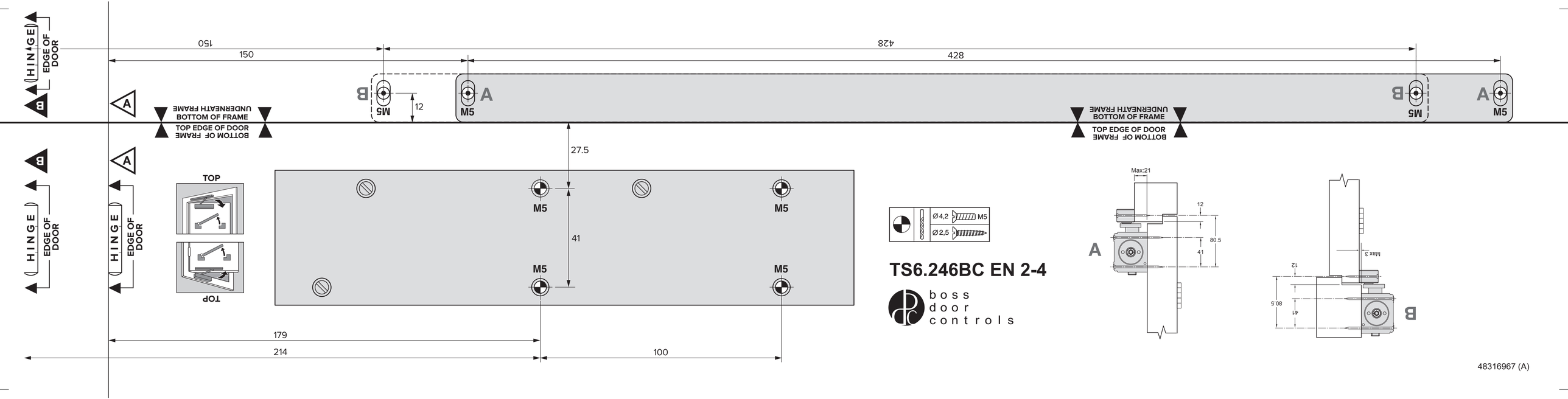

TS6.246BC EN 2-4

boss door controls

48316967 (A)

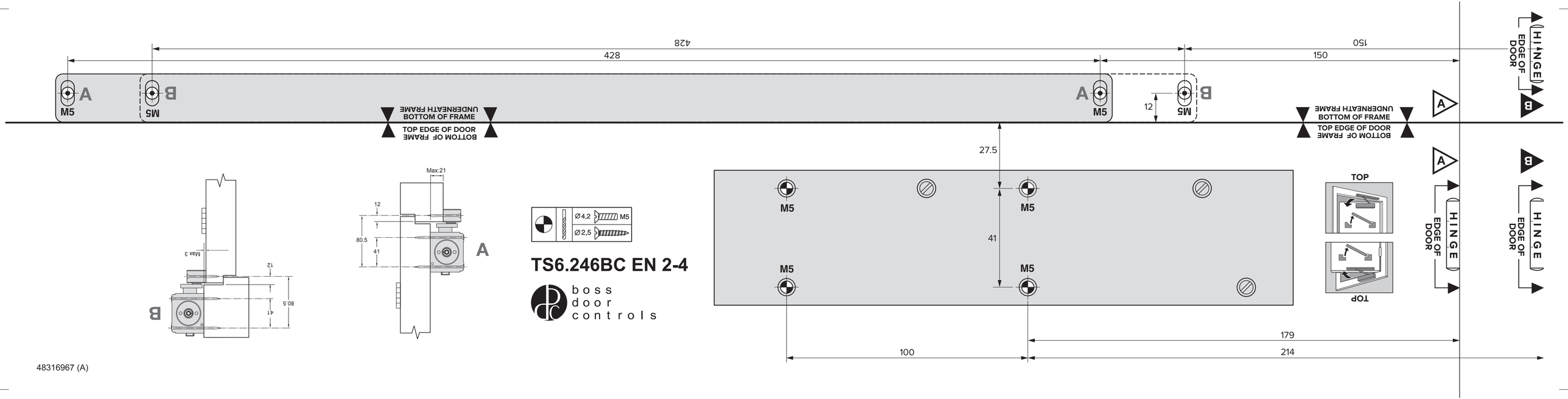
HINGE
EDGE OF DOOR
B
A
150
150
428
428
M5
M5
M5
M5
12
BOTTOM OF FRAME
UNDERNEATH FRAME
TOP EDGE OF DOOR
BOTTOM OF FRAME
UNDERNEATH FRAME
TOP EDGE OF DOOR
27.5
41
M5
M5
M5
M5
TOP
TOP
179
214
100
Max:21
12
80.5
41
Max 3
Ø4,2
M5
Ø2,5
TS6.246BC EN 2-4
boss
door
controls

48316967 (A)