boss door controls

DOOR CONTROLS
CONCEALED DOOR CLOSERS

BOSS ITS6.24SA-EMF ELECTRO HOLD OPEN CAM ACTION CLOSER

INTRODUCTION

Electromagnetic hold open cam-action, slide channel door closer, in a compact concealed unit. With the closer body mounted within the top of the door and the slide track within the head frame, the ITS6.24SA-EMF Series offers high resistance to abuse and is an aesthetic solution being fully concealed when the door is closed. The low initial opening forces of the cam action design allow easy access for less able users whilst maintaining the closing forces needed for fire safety.





FEATURES & FUNCTIONS

- Adjustable power size EN 2-4
- High efficiency cam action technology provides reliable closing for fire door applications & easy operation for accessibility
- Compact, extruded aluminium body and slide track requiring minimal removal of material from the door and frame
- Easy to reach spring power adjustments to suit to the size and location of the door
- Capable of meeting BS8300 requirements for use on accessible routes
- Adjustable closing speed and latch action
- In-built temperature compensation ensures reliable performance without the need for seasonal adjustment
- Non handed design is suitable for all applications and has a max. opening angle of 120 degrees
- Intumescent gasket kit required for fire door applications
- Powder coated steel track arm with nylon runner
- 30 min doorset minimum thickness of 44mm
- 60 min doorset minimum thickness of 54mm

The closer body can be mounted in the top of the door.

Adjustment screws are accessible when the door is open.



CERTIFICATION

- CE Marked to EN 1154 (2812-CPR-AD5114) and EN1155 (2812-CPR-AE10495)
- Certifire Approved (CF5292)
- Fire tested to EN 1634-1 for use on fire doors up to 90 mins timber when used in conjunction with intumescent pack
- Environmental Product Declaration in accordance with ISO 14025 & EN 15804
- DoP available at www.bossdoorcontrols.com/dop

Always refer to the certification page for up-to-date documentation

Boss Door Controls
3 & 4 Rutherford Square, Brucefield Industry Park,
Livingston, EH54 9BU

T: +44 (0) 1506 467 477
E: boss.sales@allegion.com

ISSUE DATE: June 2025

ALLEGION

bossdoorcontrols.com

boss door controls

BOSS ITS6.24SA-EMF ELECTRO HOLD OPEN CAM ACTION CLOSER

PRODUCT FEATURES	PRODUCT REFERENCES
	ITS6.24SA-EMF
Closer Type	Electromagnetic hold-open
Door mount	■
Concealed	■
Variable closing power EN size	2-4
Door limits (width/weight)	1100mm / 80kg
Maximum Hold Open angle of opening	120
Adjustable manual release force	40Nm - 120Nm
Closing speed & latch action adjustment	■
Operating Voltage and power imput	24Vdc 1.4W 58mA
Finishes available (Additional RAL finishes on request)	SSS, SIL, PB, PSS, MB plus 7 metallic finishes
CE Classification	3 5 4/2 1 1 3

■ Standard.

□ Available as an option/variant.

FINISHES

All finish variants are supplied with matching cover and slide channel assembly

Standard Finishes



Silver SIL | Satin Stainless SSS | Polished Stainless PSS | Polished Brass PB | Matt Black MB

Additional Metallic Finishes



Light Bronze BRZ-L | Mid Bronze BRZ-M | Dark Bronze BRZ-D | Matt Bronze BRZ-MATT | Satin Brass SB | Satin Copper COP-S | Antique Brass AB

For illustrative purposes only. Please refer to colour swatches.

Boss Door Controls
3 & 4 Rutherford Square, Brucefield Industry Park,
Livingston, EH54 9BU

T: +44 (0) 1506 467 477
E: boss.sales@allegion.com

ALLEGION

bossdoorcontrols.com

ISSUE DATE: June 2025

boss door controls

BOSS ITS6.24SA-EMF ELECTRO HOLD OPEN CAM ACTION CLOSER

DOOR MOUNT

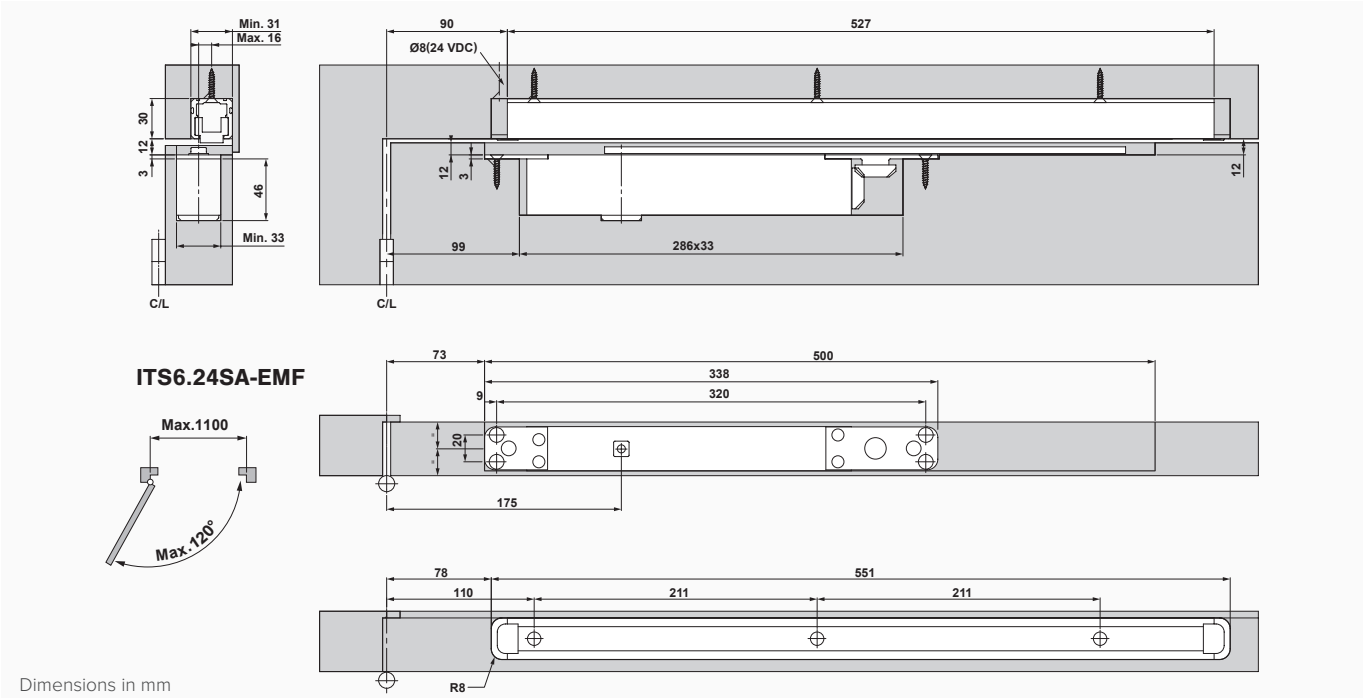

Dimensions in mm

SPECIFICATION TIP

Intumescent Gasket Set

A significant amount of fire resisting doorset material is removed when concealed closers are mortised into the door leaf. The intumescent gasket set will provide the additional performance that is required to protect the door from integrity failure during fire conditions. It is particularly important with these closers to check that the details of the fire test certification are relevant to your intended door application.

DOOR MOUNTED

With the closer body mounted in the top of the door leaf and the slide track in the underside of the transom or head frame.



ACCESSORIES

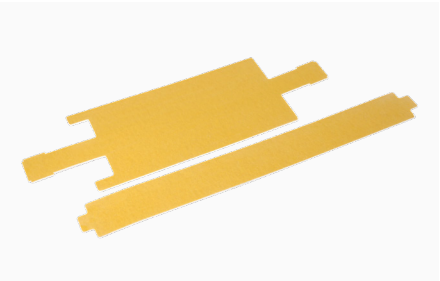

INTUMESCENT PACK

Used to maintain the fire integrity of fire-rated doors when a door closer is installed. The intumescent material expands when exposed to high heat to seal gaps and prevent the spread of fire and smoke.

Boss Door Controls
3 & 4 Rutherford Square, Brucefield Industry Park,
Livingston, EH54 9BU

T: +44 (0) 1506 467 477
E: boss.sales@allegion.com

ALLEGION
bossdoorcontrols.com

ISSUE DATE: June 2025

boss door controls

BOSS ITS6.24SA-EMF ELECTRO HOLD OPEN CAM ACTION CLOSER

ADJUSTMENT

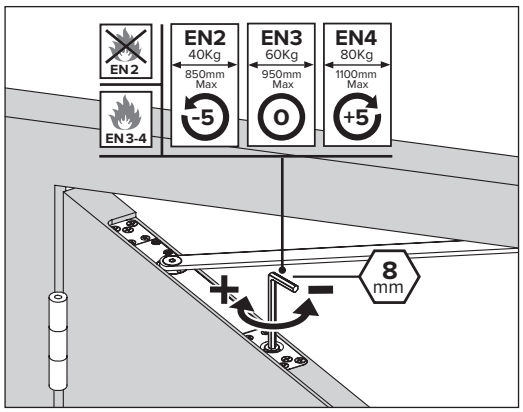

POWER SIZE

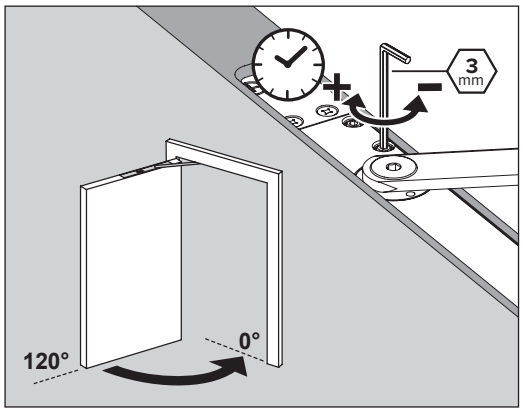

CLOSING SPEED

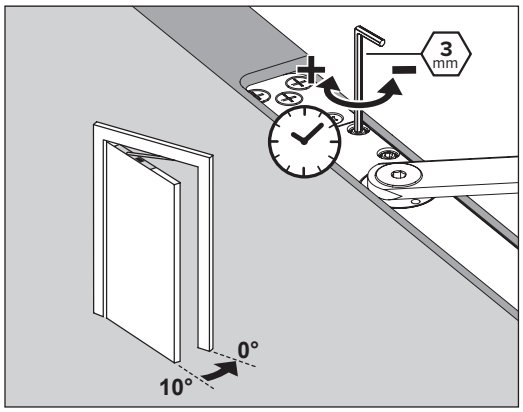

LATCH SPEED

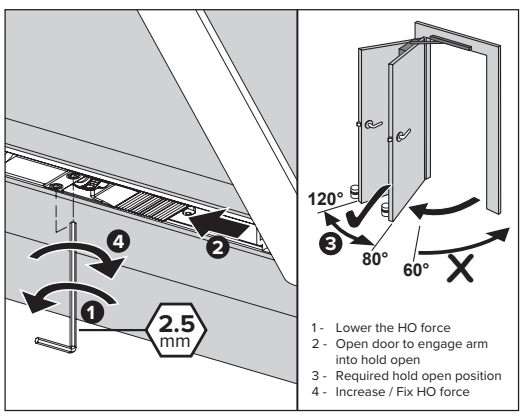

HOLD OPEN ANGLE

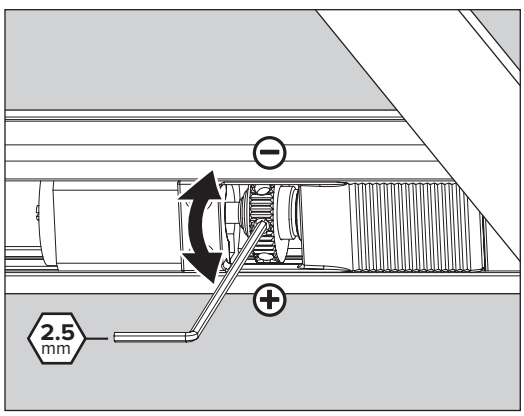

HOLD OPEN RELEASE FORCE

Boss Door Controls
3 & 4 Rutherford Square, Brucefield Industry Park,
Livingston, EH54 9BU
T: +44 (0) 1506 467 477
E: boss.sales@allegion.com

ALLEGION

bossdoorcontrols.com

ISSUE DATE: June 2025

boss door controls

GENERAL MAINTENANCE

Door controls

Allegion has identified that many problems associated with overhead door closers can be attributed directly to errors in installation rather than problems with the door closer itself. If the door is not closing properly into the frame you should first disconnect the door closer (disconnect the arm(s)) and determine that there is not an underlying problem with the door, frame or any smoke /draft seals that might be fitted.

PLEASE NOTE:

The power of the door closer should not be used to overcome problems associated with the door or other items of hardware fitted to it. Under no circumstances should the closer body be dismantled.

Types of maintenance

Much of the routine maintenance recommended consists of a combination of visual and mechanical checks, cleaning and lubrication. Look out for the icons opposite which provide a 'quick glance' reminder of the maintenance required.

Visual checks



Primarily making a visual check on the product and surrounding door/frame looking for wear, damage, and general condition.

Functional checks



Consists of checking that the product operates properly ensuring the door can fully close without any binding or undue force required. Check that any seals or weatherstripping do not inhibit correct operation of the door.

Check fixings



Fixings need to be checked regularly and tightened when necessary. Check that no projection of fixings prevents the door from swinging freely.

Lubricating



Some products will benefit from periodic lubrication using a light machine oil or as instructed.

Cleaning



Build up of grease, dust and harmful chemicals should be removed to prevent corrosion and maintain the product finish.

Boss Door Controls
3 & 4 Rutherford Square, Brucefield Industry Park,
Livingston, EH54 9BU
T: +44 (0) 1506 467 477
E: boss.sales@allegion.com

ISSUE DATE: June 2025

ALLEGION

bossdoorcontrols.com

boss door controls

CLOSER MAINTENANCE

WEEKLY CHECKS



Release the door from the fully open position and ensure that it closes fully into the frame. Ensure the latch (if fitted) engages fully into the strike plate. Repeat the process a few times from different angles of opening to ensure the door closes consistently each time.



Check and adjust the closing and latching speeds if necessary.

Check that the door or hardware does not come into contact with the door frame or the surrounding structure.

QUARTERLY CHECKS



- The fixings of the closer body and the bracket are subject to stress and should be checked carefully to make sure they are tight.



- Periodically apply a little light machine oil to the moving joints of the arm and bracket.



- Check any fire and smoke seals to ensure they do not foul the action of the door.
- Check for any loss of fluid from the door closer body which would indicate a failing device.



- Clean the closer body, arms and bracket if necessary.

FIRE DOOR APPLICATIONS

When installed as part of a fire precaution system the door closing mechanism, including the door selector if used on a double door arrangement, should be checked in accordance with standing periodic fire testing procedures.

Routinely check that all fixings of the closer body and bracket are tight.

Routine care of finishes as necessary.

Boss Door Controls
3 & 4 Rutherford Square, Brucefield Industry Park,
Livingston, EH54 9BU
T: +44 (0) 1506 467 477
E: boss.sales@allegion.com

ISSUE DATE: June 2025

ALLEGION

bossdoorcontrols.com

boss door controls

ELECTROMAGNETIC HOLD-OPEN MAINTENANCE

In situations where a fire door in a high traffic area is fitted with a door closer an electromagnetic hold-open device may be fitted which allows the door to be held open or allowed to swing free during normal use.

However, in the event of a fire, the electromagnetic hold-open device will be deactivated allowing the door to close under the action of the door closer.

- The system is powered by a 24v supply which is normally located close to the door either in the ceiling void or convenient cupboard
- The system must be connected to a separate smoke detection system and/or the building's fire alarm system

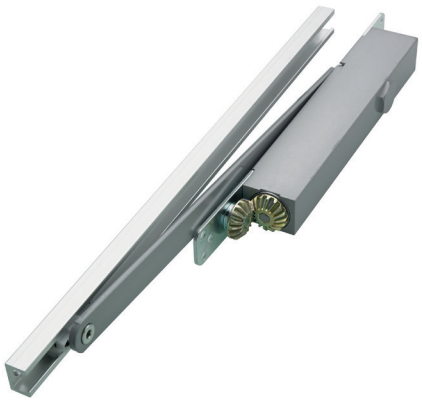

WEEKLY CHECKS

It is vitally important that the integrity of a fire door is maintained in the event of a fire. All electromagnetic hold-open devices and the ancillary equipment, including the transformer/ rectifier (power supply) must be tested weekly in accordance with the procedures set out in the fire precautions regulations.

It is recommended that the following procedure be followed:

- With the door in the hold-open position simulate the fire alarm activation and check that the door is released immediately and closes fully into the frame, fully engaging the latch if fitted. The fire alarm may be simulated in a number of ways including activation of a break glass unit or by a built-in test switch on the hold-open device.
- With the door in the hold-open position switch off the power to the hold-open devices to simulate power failure. The door should be released and close fully as above.
- With the door in the hold-open position check that the door can be pulled manually off the hold-open and close fully into the frame.

ANY FAILURE OF THE DOOR TO CLOSE MUST BE RECTIFIED IMMEDIATELY

Firstly check that the failure is due to the electromagnetic device failing to release or whether the closing mechanism failed to close the door properly for some reason.

Electronic failure should be checked by a qualified technician to determine the fault.

if the closer fails to close the door properly please refer to the Door Closer section of our 'Service and Maintenance Guide' for further information.

Boss Door Controls
3 & 4 Rutherford Square, Brucefield Industry Park,
Livingston, EH54 9BU
T: +44 (0) 1506 467 477
E: boss.sales@allegion.com

ISSUE DATE: June 2025

ALLEGION

bossdoorcontrols.com