boss door controls

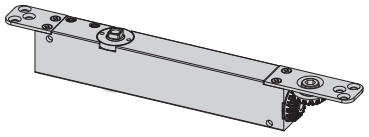

CE	Allegion (UK) Limited 35 Rocky Lane, Aston, Birmingham, B6 5RQ, UK
2812-CPR-AE10495	25
EN1155:1997+A1:2002	3 5 4/2113
Dangerous Substances: None	

24 VDC
1.4W
58mA

3 months / mois / monate / mesi / meses / maanden / ay

48317367
REVISION A

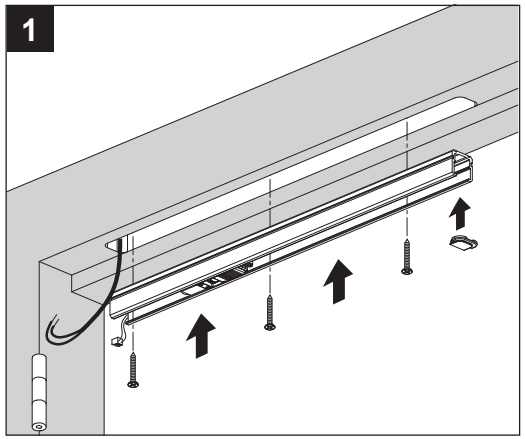

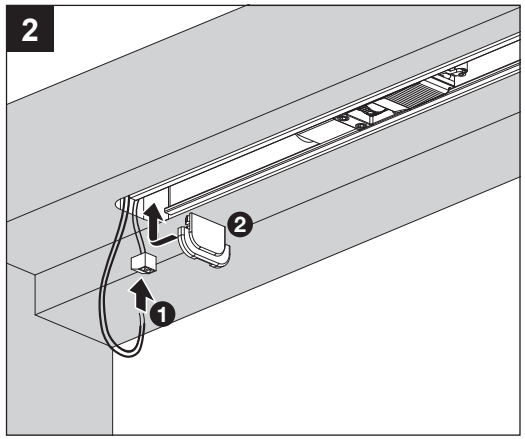

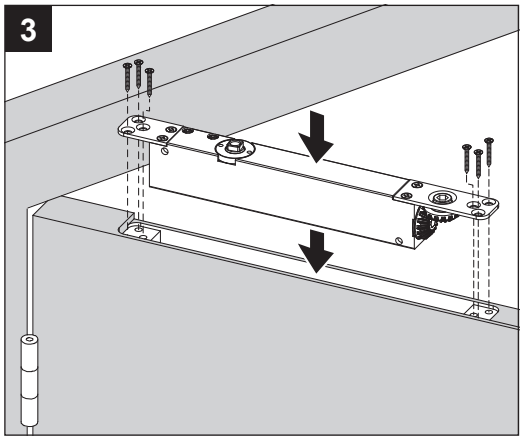

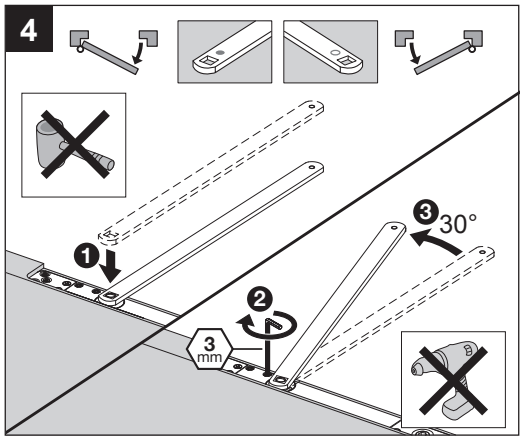

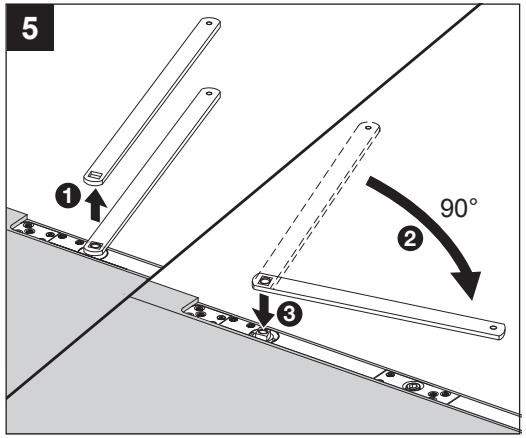

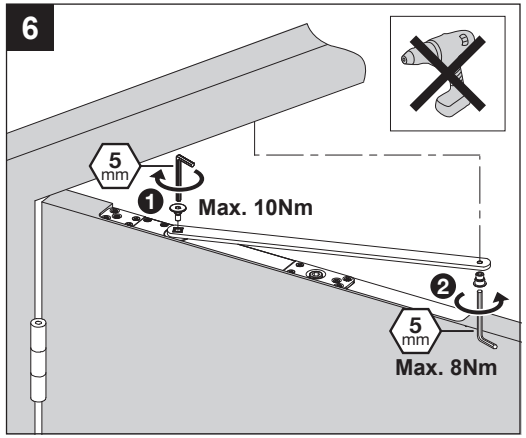

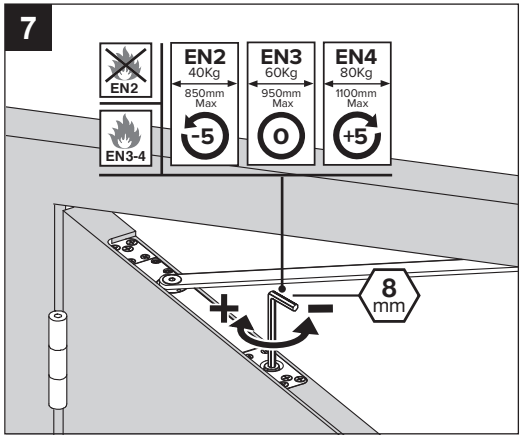

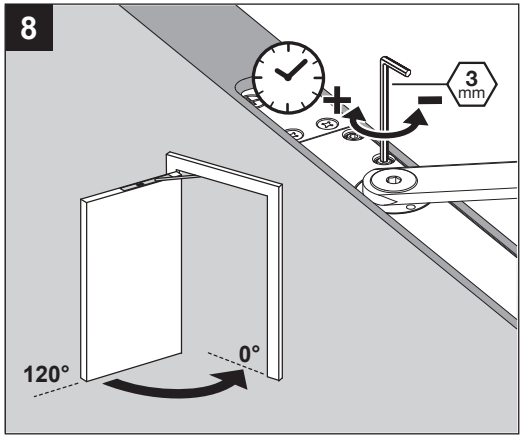

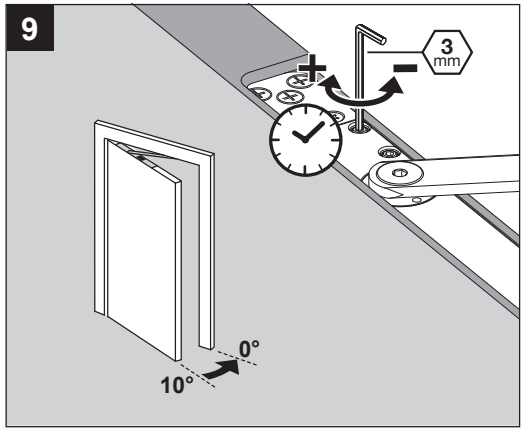

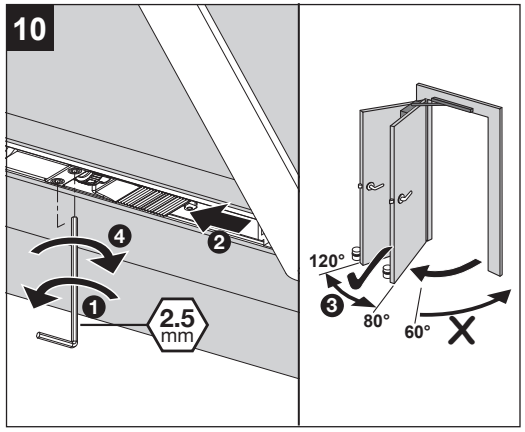

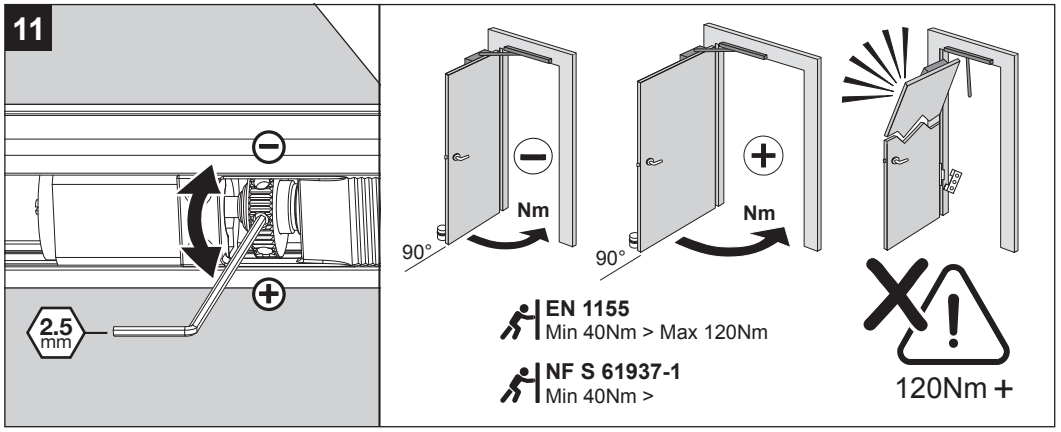

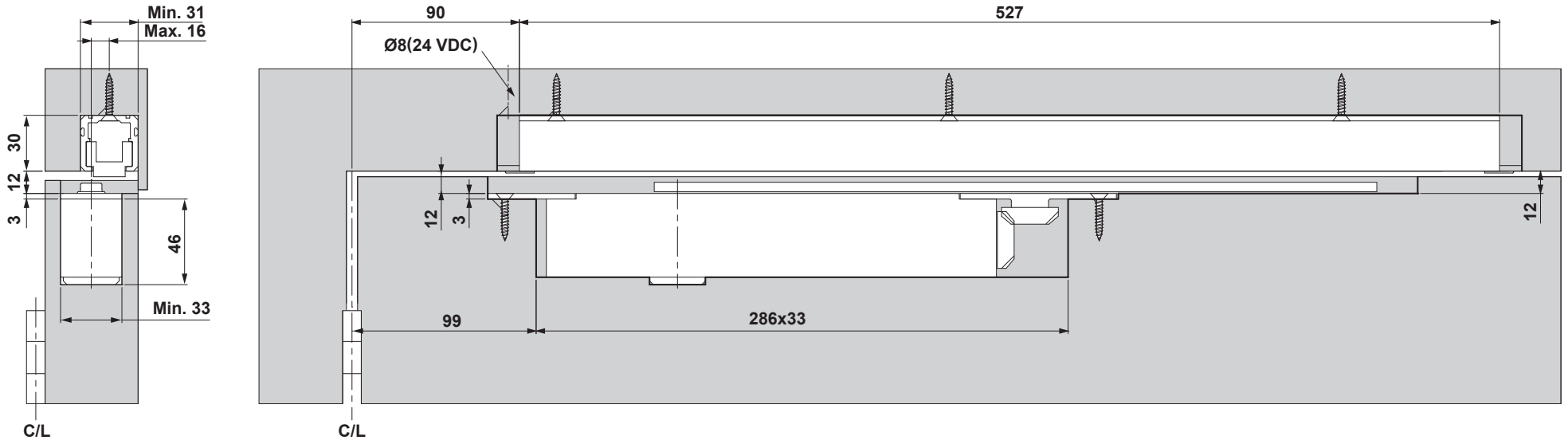

ITS6.24-EMF

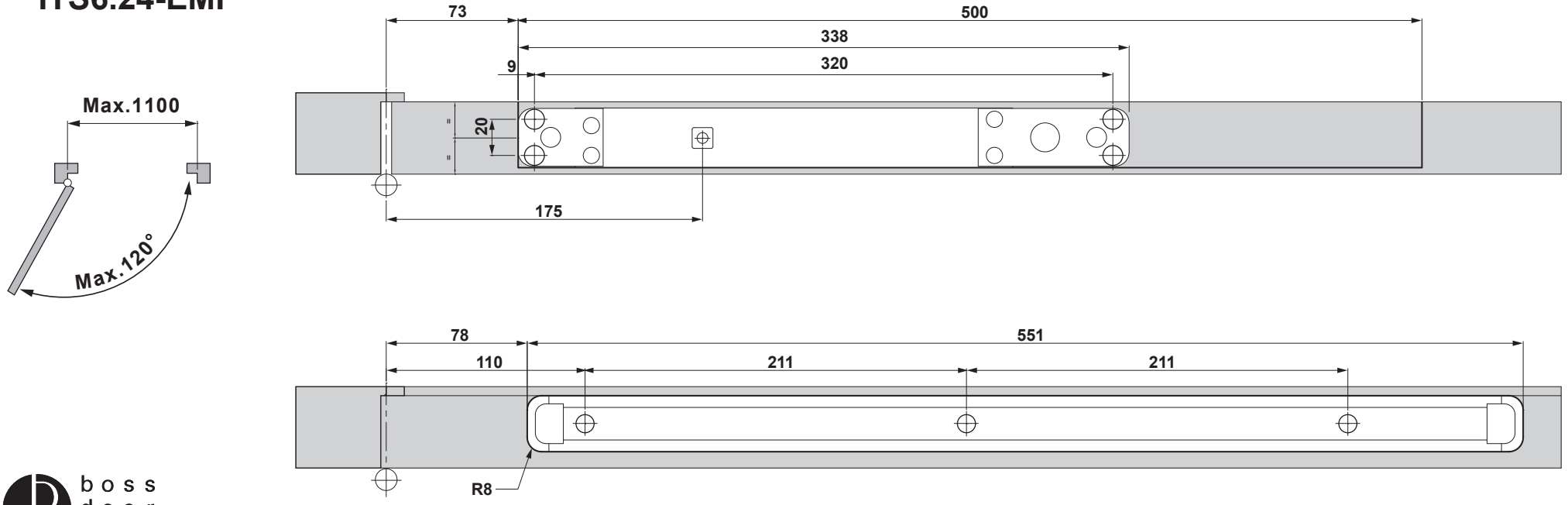

boss door controls