boss door controls

# DOOR CONTROLS
## OVERHEAD DOOR CLOSERS

### **TS6.25BCDA SERIES** CAM ACTION OVERHEAD CLOSER

## INTRODUCTION

TS6.25BCDA series is a precision manufactured cam action, slide channel door closer, in a compact surface mount fixed unit. It provides expectational ease of use by reducing the resistance encountered when opening the door.

Meeting the requirements of BS8300, the TS6.25BCDA series bridges the gap between the requirements for fire and smoke control and ease of operation required for accessibility.





## FEATURES & FUNCTIONS

- Adjustable power size EN 2-5
- High efficiency cam action technology provides reliable closing for fire door applications and easy operation for accessibility
- Capable of meeting BS8300 requirements for use on accessible routes
- Adjustable closing speed and latch action
- FAST Power Adjust dial feature allows easy power adjustment to suit door conditions
- Certified backcheck, delayed action and optional hold-open functions
- Installation template and mounting plate with dowel fixing to position the closer body ensures a quick, simple and accurate installation
- Semi-radius cover has a 'push and click' fit secured by spring-clips for quick installation and no visible fixings
- Optional electromechanical hold-open track available - refer to corresponding datasheet

## CERTIFICATION

- CE Marked to EN 1154 (2812-CPR-AD0264)
- Certifire Approved (CF738)
- Fire tested to EN 1634-1 for use on fire doors up to 120mins timber and 60mins steel
- For timber and steel fire doors please refer to the Certifire certificate for scope of approval
- Environmental Product Declaration in accordance with ISO 14025 & EN 15804
- DoP available at www.bossdoorcontrols.com/dop

**Always refer to the certification page for up-to-date documentation**

CE certifire

120 min TIMBER 60 min* STEEL

EPD GUARANTEE 25 YEARS

**Boss Door Controls**
3 & 4 Rutherford Square, Brucefield Industry Park,
Livingston, EH54 9BU

**T:** +44 (0) 1506 467 477
**E:** boss.sales@allegion.com

ALLEGION

bossdoorcontrols.com

ISSUE DATE: June 2025

boss door controls

# **TS6.25BCDA SERIES** CAM ACTION OVERHEAD CLOSER

| PRODUCT FEATURES | PRODUCT REFERENCES | |
|---|---|---|
| | **TS6.251BCDA** | **TS6.256BCDA** |
| Pull side door mount / Push side transom mount | ■ | |
| Push side door mount / Pull side transom mount | | ■ |
| Closing power EN size | 2 - 5 (door mount pull)<br>2 - 4 (transom mount push) | 2 - 5 (door mount push)<br>2 - 5 (transom mount pull) |
| Door limits (width/weight) | 1250mm / 100kg | 1250mm / 100kg |
| FAST power adjust dial | ■ | ■ |
| Template & mounting plate | ■ | ■ |
| Maximum angle of opening | 180˚ (door mount pull)<br>120˚ (transom mount push) | 120˚ (door mount push)<br>180˚ (transom mount pull) |
| Separate closing speed & latch action adjustment | ■ | ■ |
| Adjustable backcheck | ■ | ■ |
| Adjustable delayed action | ■<br>(excludes TS6.251BCDA transom mount) | ■ |
| Mechanical hold-open facility | □ | □ |
| Electromagnetic hold-open facility (Refer to the corresponding data sheet for further detail) | □ | □ |
| Matching slide channel, arm & cover finish | ■ | ■ |
| Finishes available (Additional RAL finishes on request) | SSS, SIL, PB, PSS, MB plus 7 metallic finishes | SSS, SIL, PB, PSS, MB plus 7 metallic finishes |
| CE Classification (door mount) | 4 8 2-5 1 1 3 | 3 8 2-5 1 1 3 |
| CE Classification (transom mount) | 3 8 2-4 1 1 3 | 4 8 2-5 1 1 3 |

■ Standard.

□ Available as an option/variant.

## FINISHES

All finish variants are supplied with matching cover and slide channel assembly

Standard Finishes



Silver SIL | Satin Stainless SSS | Polished Stainless PSS | Polished Brass PB | Matt Black MB

Additional Metallic Finishes



Light Bronze BRZ-L | Mid Bronze BRZ-M | Dark Bronze BRZ-D | Matt Bronze BRZ-MATT | Satin Brass SB | Satin Copper COP-S | Antique Brass AB

For illustrative purposes only. Please refer to colour swatches.

**Boss Door Controls**
3 & 4 Rutherford Square, Brucefield Industry Park,
Livingston, EH54 9BU
**T:** +44 (0) 1506 467 477
**E:** boss.sales@allegion.com

ISSUE DATE: June 2025

ALLEGION

bossdoorcontrols.com

boss door controls

# **TS6.25BCDA SERIES** CAM ACTION OVERHEAD CLOSER

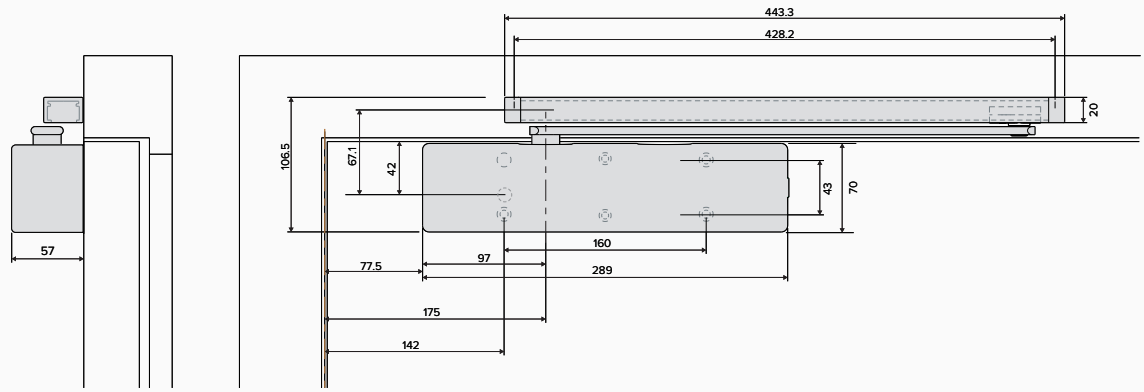


Standard closers with/without mechanical hold open (door mounted - pull side shown).

Dimensions in mm

**TS6.251BCDA**
Door mount pull side
Max. opening angle 180˚

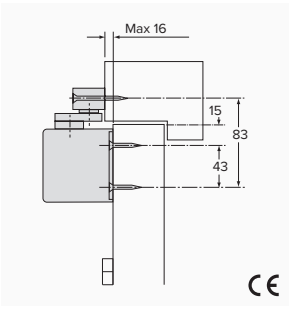




**TS6.251BCDA**
Transom mount push side
Max. opening angle 120˚

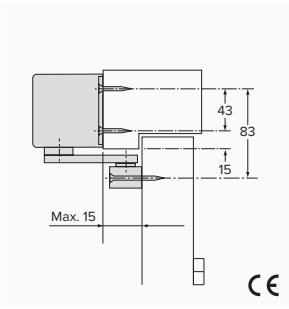




**TS6.256BCDA**
Door mount push side
Max. opening angle 120˚

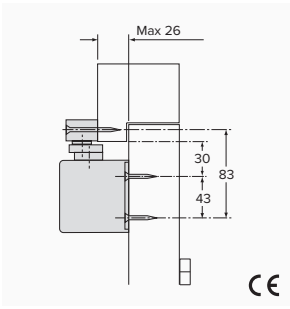




**TS6.256BCDA**
Transom mount pull side
Max. opening angle 180˚

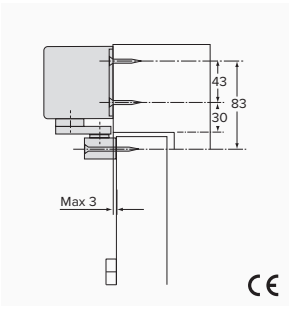




**Boss Door Controls**
3 & 4 Rutherford Square, Brucefield Industry Park,
Livingston, EH54 9BU
**T:** +44 (0) 1506 467 477
**E:** boss.sales@allegion.com

ISSUE DATE: June 2025

ALLEGION

bossdoorcontrols.com

boss door controls

# **TS6.25BCDA SERIES** CAM ACTION OVERHEAD CLOSER

## ADJUSTMENT

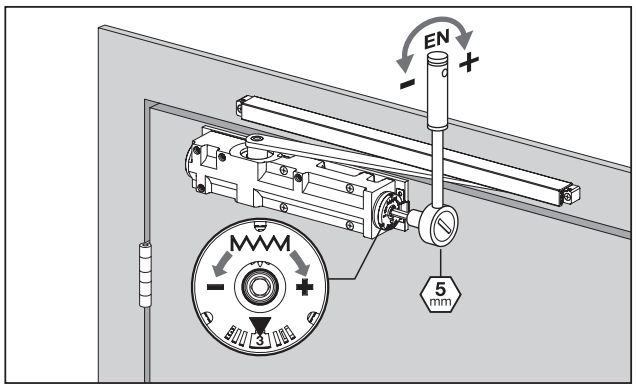


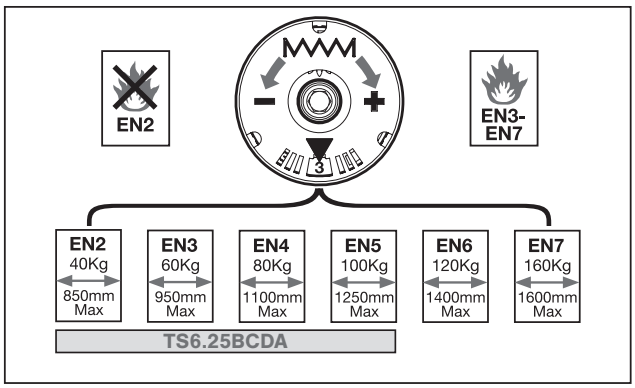


### POWER SIZE

These images determine the power size and the number of turns you have to complete to adjust.

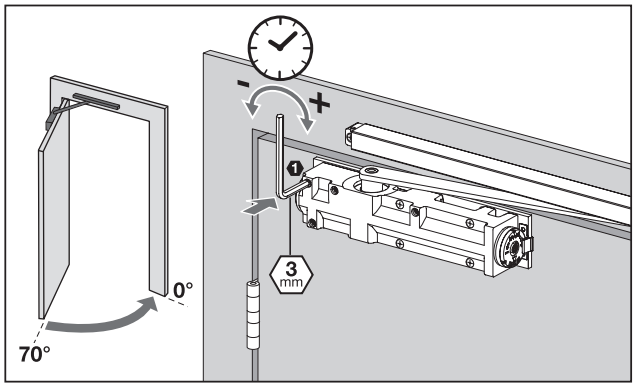


### CLOSING SPEED

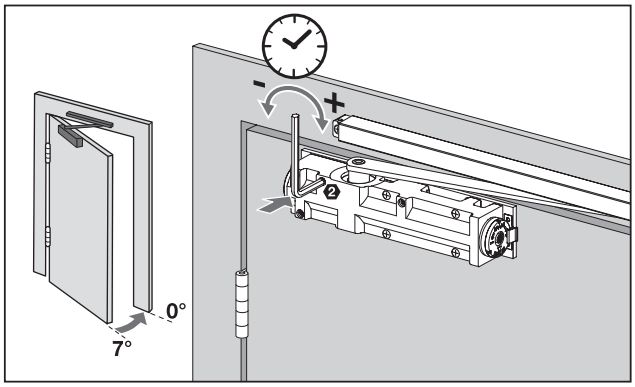


### LATCH ACTION SPEED

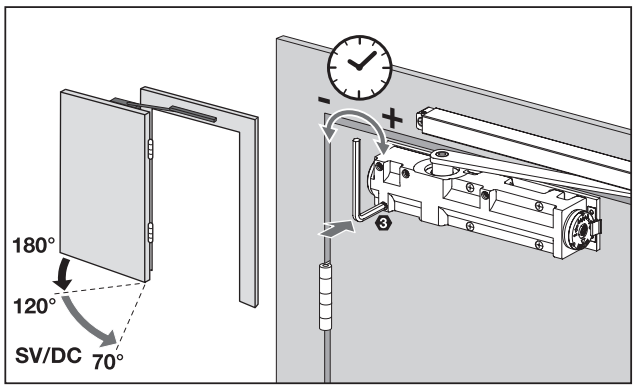


### DELAYED ACTION

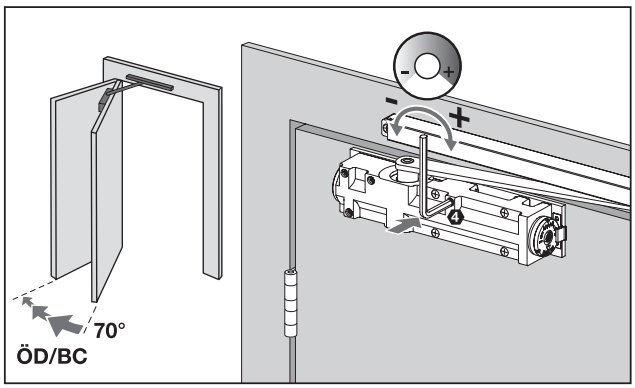


### BACKCHECK ADJUSTMENT

**Boss Door Controls**
3 & 4 Rutherford Square, Brucefield Industry Park,
Livingston, EH54 9BU

**T:** +44 (0) 1506 467 477
**E:** boss.sales@allegion.com

ALLEGION

bossdoorcontrols.com

ISSUE DATE: June 2025

boss door controls

# **TS6.25BCDA SERIES** CAM ACTION OVERHEAD CLOSER

## ACCESSORIES



**TS6.SA-EMF** - ELECTROMAGNETIC HOLD-OPEN VARIANT

An electromagnetic hold-open device is designed to hold the door open under normal conditions, and automatically release the door to close in the event of a fire or emergency. Refer to corresponding datasheet for further details.



**TS6.25CPS** - SEMI-RADIUS COVER PACK

A replacement cover that fits over the exposed body of the door closer mechanism to enhance the appearance of a door closer.

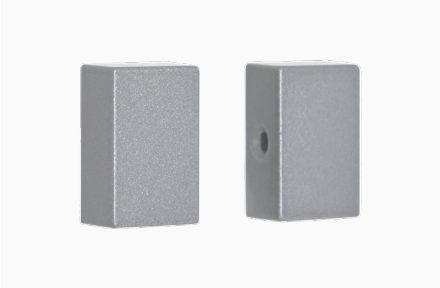

**TS6.25ECP.SIL** - TRACK END CAPS & BRACKET PACK

Pack includes mounting bracket and end caps to ensure proper functionality, protection, and a polished appearance.

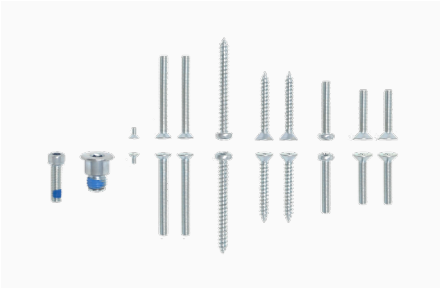

**TS6.25FP** - FIXING PACK

A set of components required to install a door closer onto a door and/or frame.



**TS6.25HP** - HOLD-OPEN CONVERSION PACK

A kit to modify a standard door closer to include a hold-open feature to allow the door to stay open at a fixed position without being forced to close. Not to be used on fire doors.



**TS6.25NS** - NYLON TRACK SLIDER

A nylon slider mechanism that moves within the track to control the opening and closing of a door providing a smooth and controlled door operation.



**TS6.25TAP** - TRACK ARM PACK

A set of components including track arm and additional parts needed to attach the door closer to the door and frame.

**Boss Door Controls**
3 & 4 Rutherford Square, Brucefield Industry Park,
Livingston, EH54 9BU

**T:** +44 (0) 1506 467 477
**E:** boss.sales@allegion.com

ISSUE DATE: June 2025

ALLEGION

bossdoorcontrols.com

boss door controls

# GENERAL MAINTENANCE

### Door controls

Allegion has identified that many problems associated with overhead door closers can be attributed directly to errors in installation rather than problems with the door closer itself. If the door is not closing properly into the frame you should first disconnect the door closer (disconnect the arm(s)) and determine that there is not an underlying problem with the door, frame or any smoke /draft seals that might be fitted.

## PLEASE NOTE:

The power of the door closer should not be used to overcome problems associated with the door or other items of hardware fitted to it. Under no circumstances should the closer body be dismantled.

### Types of maintenance

Much of the routine maintenance recommended consists of a combination of visual and mechanical checks, cleaning and lubrication. Look out for the icons opposite which provide a 'quick glance' reminder of the maintenance required.

### Visual checks



Primarily making a visual check on the product and surrounding door/frame looking for wear, damage, and general condition.

### Functional checks



Consists of checking that the product operates properly ensuring the door can fully close without any binding or undue force required. Check that any seals or weatherstripping do not inhibit correct operation of the door.

### Check fixings



Fixings need to be checked regularly and tightened when necessary. Check that no projection of fixings prevents the door from swinging freely.

### Lubricating



Some products will benefit from periodic lubrication using a light machine oil or as instructed.

### Cleaning



Build up of grease, dust and harmful chemicals should be removed to prevent corrosion and maintain the product finish.

**Boss Door Controls**
3 & 4 Rutherford Square, Brucefield Industry Park,
Livingston, EH54 9BU
**T:** +44 (0) 1506 467 477
**E:** boss.sales@allegion.com

ISSUE DATE: June 2025

ALLEGION

bossdoorcontrols.com

boss door controls

# CLOSER MAINTENANCE

## WEEKLY CHECKS



Release the door from the fully open position and ensure that it closes fully into the frame. Ensure the latch (if fitted) engages fully into the strike plate. Repeat the process a few times from different angles of opening to ensure the door closes consistently each time.



Check and adjust the closing and latching speeds if necessary.

Check that the door or hardware does not come into contact with the door frame or the surrounding structure.

## QUARTERLY CHECKS



- The fixings of the closer body and the bracket are subject to stress and should be checked carefully to make sure they are tight.



- Periodically apply a little light machine oil to the moving joints of the arm and bracket.



- Check any fire and smoke seals to ensure they do not foul the action of the door.
- Check for any loss of fluid from the door closer body which would indicate a failing device.



- Clean the closer body, arms and bracket if necessary.

### FIRE DOOR APPLICATIONS

When installed as part of a fire precaution system the door closing mechanism, including the door selector if used on a double door arrangement, should be checked in accordance with standing periodic fire testing procedures.

Routinely check that all fixings of the closer body and bracket are tight.

Routine care of finishes as necessary.

**Boss Door Controls**
3 & 4 Rutherford Square, Brucefield Industry Park,
Livingston, EH54 9BU
**T:** +44 (0) 1506 467 477
**E:** boss.sales@allegion.com

ISSUE DATE: June 2025

ALLEGION

bossdoorcontrols.com