boss door controls

DOOR CONTROLS
OVERHEAD DOOR CLOSERS

TS6.24BC SERIES CAM ACTION OVERHEAD CLOSER

INTRODUCTION

TS6.24BC Series is a precision manufactured cam-action, slide channel door closer, in a compact, surface fixed unit. It provides exceptional ease of use by reducing the resistance encountered when opening the door allowing, in particular, children and the elderly to overcome the closing power without any problems.



FEATURES & FUNCTIONS

- Adjustable power size EN 2-4
- Certified in door mount push/pull and transom mount push/pull applications
- High efficiency cam action technology provides reliable closing for fire door applications and easy operation for accessibility meeting BS8300 requirements for use on accessible routes
- Adjustable closing speed to control the speed at which the door closes
- Certified adjustable backcheck to prevent damage to the door and frame
- In-built temperature compensation ensures reliable performance without the need for seasonal adjustment
- Installation template, together with easy-to-read instructions assist quick, simple and accurate installation
- Semi-radius cover secured by simple spring-clips for quick installation with no visible fixings
- Optional hold-open pack (not to be used on fire doors)
- Optional electromechanical hold-open track available - refer to corresponding datasheet

CERTIFICATION

- CE Marked to EN 1154 (2812-CPR-AD5118)
- Certifire Approved (CF5291)
- Fire tested to EN 1634-1 for use on fire doors up to 120mins timber
- For timber fire doors please refer to the Certifire certificate for scope of approval
- Environmental Product Declaration in accordance with ISO 14025 & EN 15804
- DoP available at www.bossdoorcontrols.com/dop

Always refer to the certification page for up-to-date documentation

CE certifire

120 min TIMBER

EPD GUARANTEE 25 YEARS

Boss Door Controls
3 & 4 Rutherford Square, Brucefield Industry Park,
Livingston, EH54 9BU

T: +44 (0) 1506 467 477
E: boss.sales@allegion.com

ALLEGION

bossdoorcontrols.com

ISSUE DATE: June 2025

boss door controls

TS6.24BC SERIES CAM ACTION OVERHEAD CLOSER

PRODUCT FEATURES	PRODUCT REFERENCES	
	TS6.241BC	**TS6.246BC**
Closer type	Cam Action Track Arm	Cam Action Track Arm
Pull side door mount / Push side transom mount	■	
Push side door mount / Pull side transom mount		■
Closing power EN size	2-4	2-4
Door limits (width / weight)	1100mm / 80kg	1100mm / 80kg
Template	■	■
Maximum angle of opening	180˚ (door mount pull) 120˚ (transom mount push)	120˚ (door mount pull) 180˚ (transom mount push)
Closing speed & latch action adjustment	■	■
Adjustable backcheck	■*	■
Adjustable delayed action	N/A	N/A
Mechanical hold-open facility	□	□
Electromagnetic hold-open facility (Refer to corresponding datasheet for further details)	□	□
Matching channel, arm & cover finish	□	□
Finishes available (Additional RAL finishes on request)	SSS, SIL, PB, PSS, MB plus 7 metallic finishes	SSS, SIL, PB, PSS, MB plus 7 metallic finishes
CE Classification (pull side door mount & pull side transom mount)	4 8 2-4 1 1 3	
CE Classification (push side door mount & push side transom mount)	3 8 2-4 1 1 3	

■ Standard.

□ Available as an option/variant.

* NOTE: Backcheck function unavailable when installed in the transom mount push position.

FINISHES

All finish variants are supplied with matching cover and slide channel assembly

Standard Finishes



Silver SIL | Satin Stainless SSS | Polished Stainless PSS | Polished Brass PB | Matt Black MB

Additional Metallic Finishes



Light Bronze BRZ-L | Mid Bronze BRZ-M | Dark Bronze BRZ-D | Matt Bronze BRZ-MATT | Satin Brass SB | Satin Copper COP-S | Antique Brass AB

For illustrative purposes only. Please refer to colour swatches.

Boss Door Controls
3 & 4 Rutherford Square, Brucefield Industry Park,
Livingston, EH54 9BU

T: +44 (0) 1506 467 477
E: boss.sales@allegion.com

ISSUE DATE: June 2025

ALLEGION™

bossdoorcontrols.com

boss door controls

TS6.24BC SERIES CAM ACTION OVERHEAD CLOSER

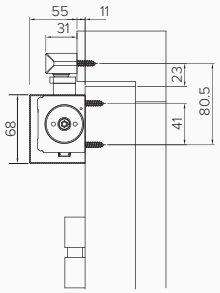

Door mount - Pull side

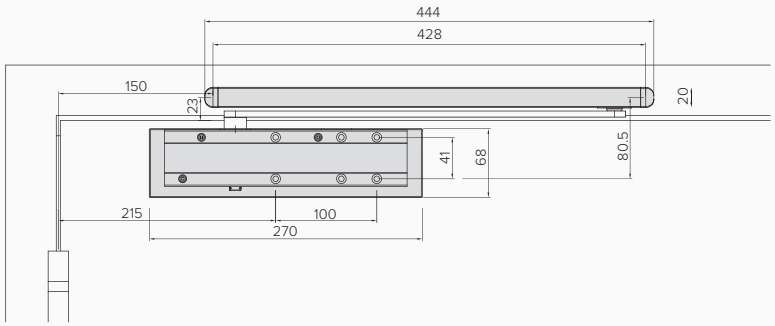

Dimensions in mm

TS6.241BC
Door mount pull side
Max. opening angle 180˚

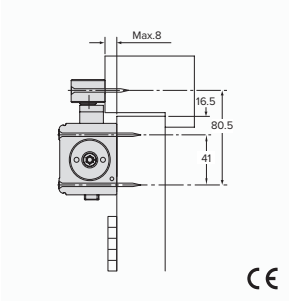

TS6.241BC
Transom mount push side
Max. opening angle 120˚

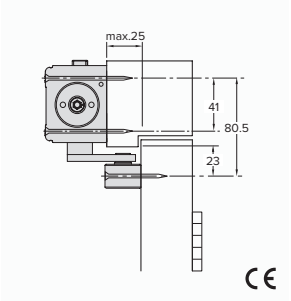

TS6.246BC
Door mount push side
Max. opening angle 120˚

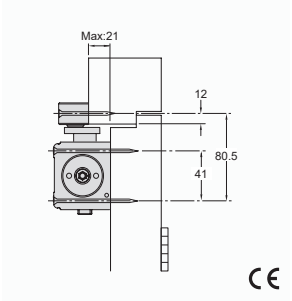

TS6.246BC
Transom mount pull side
Max. opening angle 180˚

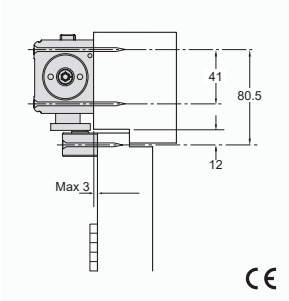









Boss Door Controls
3 & 4 Rutherford Square, Brucefield Industry Park,
Livingston, EH54 9BU
T: +44 (0) 1506 467 477
E: boss.sales@allegion.com

ALLEGION

bossdoorcontrols.com

ISSUE DATE: June 2025

boss door controls

TS6.24BC SERIES CAM ACTION OVERHEAD CLOSER

ADJUSTMENT

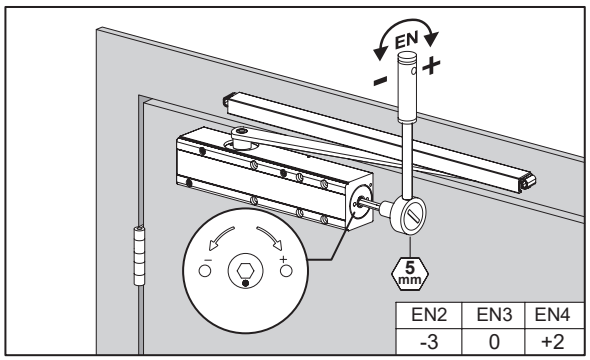

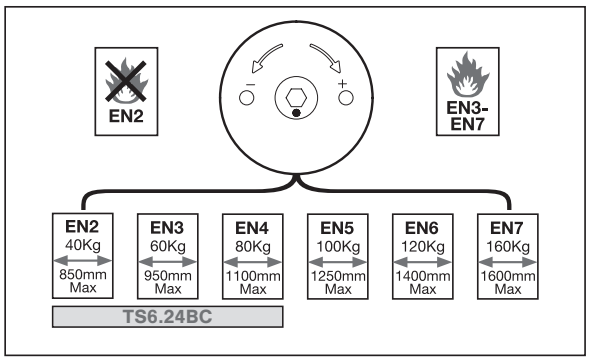

POWER SIZE

These images determine the power size and the number of turns you have to complete to adjust.

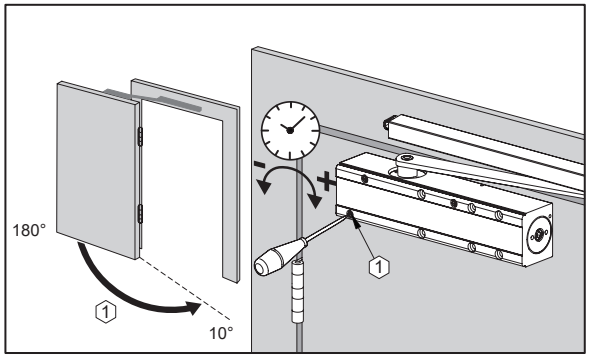

CLOSING SPEED

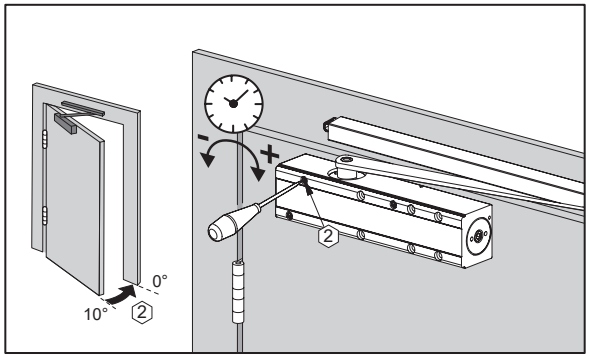

LATCH ACTION SPEED

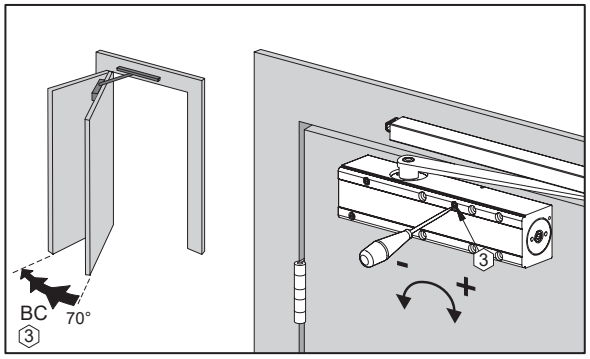

BACKCHECK ADJUSTMENT

Boss Door Controls
3 & 4 Rutherford Square, Brucefield Industry Park,
Livingston, EH54 9BU
T: +44 (0) 1506 467 477
E: boss.sales@allegion.com

ISSUE DATE: June 2025

ALLEGION
bossdoorcontrols.com

boss door controls

TS6.24BC SERIES CAM ACTION OVERHEAD CLOSER

ACCESSORIES



TS6.SA-EMF - ELECTROMAGNETIC HOLD-OPEN VARIANT

An electromagnetic hold-open device is designed to hold the door open under normal conditions, and automatically release the door to close in the event of a fire or emergency. Refer to corresponding datasheet for further details.



TS6.24TAP - ARM PACK

A set of components including arm and additional parts needed to attach the door closer to the door and frame.



TS6.24CPS - SEMI-RADIUS COVER PACK

A set of components that includes a semi-radius cover designed to enhance the appearance of a door closer.



TS6.24HP - HOLD-OPEN CONVERSION PACK

A kit to modify a standard door closer to include a hold-open feature to allow the door to stay open at a fixed position without being forced to close. Not to be used on fire doors.



TS6.24NS - NYLON TRACK SLIDER

A nylon slider mechanism that moves within the track to control the opening and closing of a door providing a smooth and controlled door operation.



TS6.24CS - TS6.24BC & TS6.25BCDA SERIES CAM ACTION CUSHION STOP

Designed to absorb the impact when the door is pushed open to its maximum angle.

Boss Door Controls
3 & 4 Rutherford Square, Brucefield Industry Park,
Livingston, EH54 9BU

T: +44 (0) 1506 467 477
E: boss.sales@allegion.com

ISSUE DATE: June 2025

ALLEGION

bossdoorcontrols.com

boss door controls

GENERAL MAINTENANCE

Door controls

Allegion has identified that many problems associated with overhead door closers can be attributed directly to errors in installation rather than problems with the door closer itself. If the door is not closing properly into the frame you should first disconnect the door closer (disconnect the arm(s)) and determine that there is not an underlying problem with the door, frame or any smoke /draft seals that might be fitted.

PLEASE NOTE:

The power of the door closer should not be used to overcome problems associated with the door or other items of hardware fitted to it. Under no circumstances should the closer body be dismantled.

Types of maintenance

Much of the routine maintenance recommended consists of a combination of visual and mechanical checks, cleaning and lubrication. Look out for the icons opposite which provide a 'quick glance' reminder of the maintenance required.

Visual checks



Primarily making a visual check on the product and surrounding door/frame looking for wear, damage, and general condition.

Functional checks



Consists of checking that the product operates properly ensuring the door can fully close without any binding or undue force required. Check that any seals or weatherstripping do not inhibit correct operation of the door.

Check fixings



Fixings need to be checked regularly and tightened when necessary. Check that no projection of fixings prevents the door from swinging freely.

Lubricating



Some products will benefit from periodic lubrication using a light machine oil or as instructed.

Cleaning



Build up of grease, dust and harmful chemicals should be removed to prevent corrosion and maintain the product finish.

Boss Door Controls
3 & 4 Rutherford Square, Brucefield Industry Park,
Livingston, EH54 9BU
T: +44 (0) 1506 467 477
E: boss.sales@allegion.com

ISSUE DATE: June 2025

ALLEGION

bossdoorcontrols.com

boss door controls

CLOSER MAINTENANCE

WEEKLY CHECKS



Release the door from the fully open position and ensure that it closes fully into the frame. Ensure the latch (if fitted) engages fully into the strike plate. Repeat the process a few times from different angles of opening to ensure the door closes consistently each time.



Check and adjust the closing and latching speeds if necessary.

Check that the door or hardware does not come into contact with the door frame or the surrounding structure.

QUARTERLY CHECKS



- The fixings of the closer body and the bracket are subject to stress and should be checked carefully to make sure they are tight.



- Periodically apply a little light machine oil to the moving joints of the arm and bracket.



- Check any fire and smoke seals to ensure they do not foul the action of the door.
- Check for any loss of fluid from the door closer body which would indicate a failing device.



- Clean the closer body, arms and bracket if necessary.

FIRE DOOR APPLICATIONS

When installed as part of a fire precaution system the door closing mechanism, including the door selector if used on a double door arrangement, should be checked in accordance with standing periodic fire testing procedures.

Routinely check that all fixings of the closer body and bracket are tight.

Routine care of finishes as necessary.

Boss Door Controls
3 & 4 Rutherford Square, Brucefield Industry Park,
Livingston, EH54 9BU
T: +44 (0) 1506 467 477
E: boss.sales@allegion.com

ISSUE DATE: June 2025

ALLEGION

bossdoorcontrols.com