boss door controls

DOOR CONTROLS
CONCEALED DOOR CLOSERS

ITS6.225 CAM ACTION DOOR CLOSER



INTRODUCTION

Installed discreetly within the door or frame, the ITS6.225 Concealed Cam-Action Door Closer combines sleek aesthetics with reliable performance. Engineered for modern, high-traffic environments, this innovative closer ensures smooth, controlled door closing while maintaining a clean, unobstructive appearance - making it ideal for spaces where style and functionality are essential.

FEATURES & FUNCTIONS

- Spring adjustable power size EN 2-5
- Certified for concealed applications
- High efficiency cam action technology provides reliable closing for fire door applications and easy operation for accessibility meeting BS8300 requirements for use on accessible routes
- Adjustable closing speed and latch action
- High corrosion resistance
- Optional hold-open pack (not to be used on fire doors)

The closer body can be mounted in the top of the door.

Adjustment screws are accessible when the door is open.



CERTIFICATION

- CE Marked to EN 1154 (2812-CPR-AD8109)
- UKCA marked to EN 1154 (1121-CPR-UK-AD8017)
- Fire tested to EN 1634-1 on timber doors to achieve a 60 minute fire rating (54mm doors) and a 30 minute fire rating (44mm doors)
- Certifire Approved (CF6141)
- For timber fire doors please refer to the Certifire certificate for scope of approval
- DoP available at www.bossdoorcontrols.com/dop

Always refer to the certification page for up-to-date documentation

EN 1154 EN 1154 CF6141

60 min TIMBER

EPD

Boss Door Controls
3 & 4 Rutherford Square, Brucefield Industry Park,
Livingston, EH54 9BU

T: +44 (0) 1506 467 477
E: boss.sales@allegion.com

ALLEGION

bossdoorcontrols.com

ISSUE DATE: January 2026

boss door controls

ITS6.225 CAM ACTION DOOR CLOSER

PRODUCT FEATURES	PRODUCT REFERENCES
	ITS6.225
Closer type	Concealed Cam Action Track Arm
Closing power EN size	2-5
Minimum Door limits (width / thickness)	600mm / 54mm
Maximum Door limits (width / weight)	1250mm / 100kg
Template	N/A
Maximum angle of opening	105˚
Closing speed & latch action adjustment	■
Adjustable backcheck	N/A
Adjustable delayed action	N/A
Mechanical hold-open facility	□
Matching channel, arm	■
Finishes available (Additional RAL finishes on request)	SSS, SIL, PB, PSS, MB plus 7 metallic finishes
CE Classification	3 8 2-5 1 1 3

■ Standard.

□ Available as an option/variant.

FINISHES

All finish variants are supplied with matching cover and slide channel assembly

Standard Finishes



Silver SIL | Satin Stainless SSS | Polished Stainless PSS | Polished Brass PB | Matt Black MB

Additional Metallic Finishes



Light Bronze BRZ-L | Mid Bronze BRZ-M | Dark Bronze BRZ-D | Matt Bronze BRZ-MATT | Satin Brass SB | Satin Copper COP-S | Antique Brass AB

For illustrative purposes only. Please refer to colour swatches.

Boss Door Controls
3 & 4 Rutherford Square, Brucefield Industry Park,
Livingston, EH54 9BU
T: +44 (0) 1506 467 477
E: boss.sales@allegion.com

ALLEGION

bossdoorcontrols.com

ISSUE DATE: January 2026

boss door controls

ITS6.225 CAM ACTION DOOR CLOSER

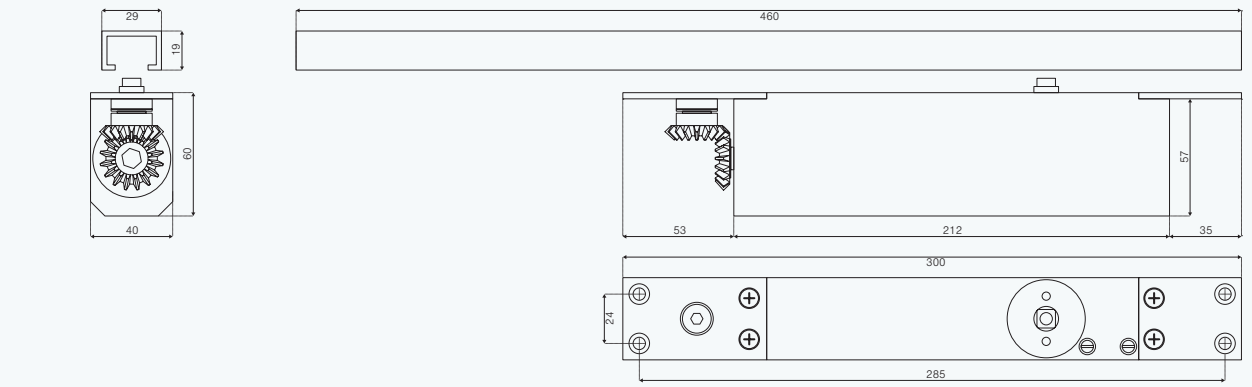

Dimensions in mm

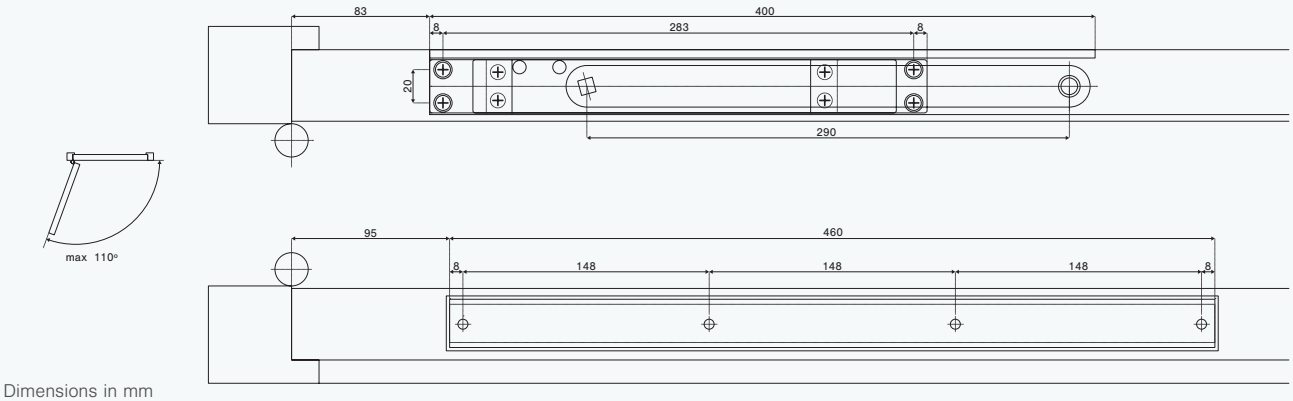

Dimensions in mm

DOOR MOUNTED

With the closer body mounted in the top of the door leaf and the slide track in the underside of the transom or head frame.



Boss Door Controls
3 & 4 Rutherford Square, Brucefield Industry Park,
Livingston, EH54 9BU

T: +44 (0) 1506 467 477
E: boss.sales@allegion.com

ALLEGION
bossdoorcontrols.com

ISSUE DATE: January 2026

boss door controls

ITS6.225 CAM ACTION DOOR CLOSER

ADJUSTMENT

Proper adjustment of door closers is essential for ensuring smooth, safe, and reliable door operation.

ITS6.225 door closer adjustments allow the closing action to be customised to meet the specific needs of the environment.



Adjustable closing power

EN 2 - 5 power level adjustment.

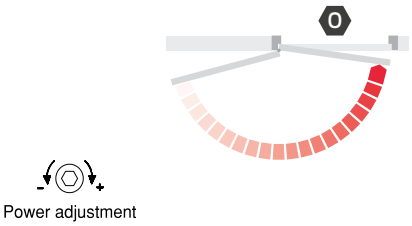

Adjustable closing speed

Adjustable from 120˚ opening through to the final 15˚.

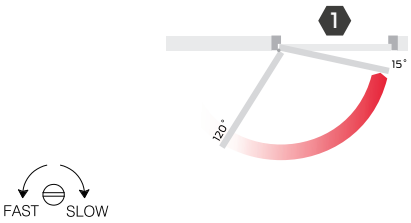

Adjustable latch action

The speed of closing in the last 15˚ can be adjusted to overcome seals and latches.



Adjustable hold-open

Mechanical hold-open variants are available to hold the door in the open position. Mechanical hold open 80˚- 120° Max.

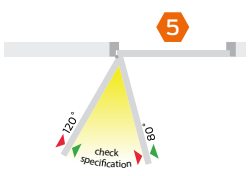

Boss Door Controls
3 & 4 Rutherford Square, Brucefield Industry Park,
Livingston, EH54 9BU

T: +44 (0) 1506 467 477
E: boss.sales@allegion.com

ISSUE DATE: January 2026

ALLEGION

bossdoorcontrols.com

boss door controls

ITS6.225 CAM ACTION OVERHEAD CLOSER

ACCESSORIES

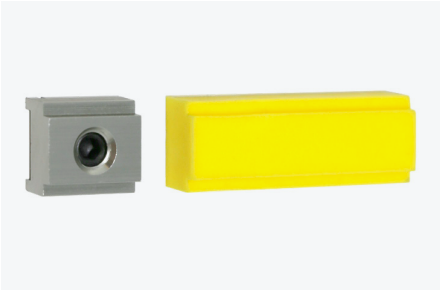

T5000SA/BS
Mechanical backstop

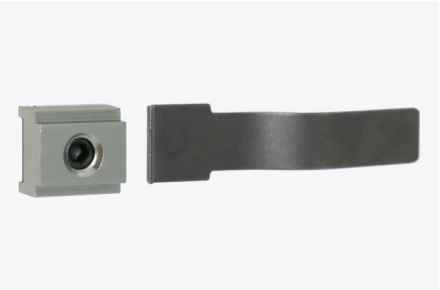

T5000SA/HO
Track hold-open device (not to be used on fire doors)*
not CE marked

SPECIFICATION TIP

Intumescent Gasket Set

A significant amount of fire resisting doorset material is removed when concealed closers are mortised into the door leaf. The intumescent gasket set will provide the additional performance that is required to protect the door from integrity failure during fire conditions. It is particularly important with these closers to check that the details of the fire test certification are relevant to your intended door application.



TQITS6224-FD30 / TQITS6224-FD60
Intumescent pack for fire door installation

Boss Door Controls
3 & 4 Rutherford Square, Brucefield Industry Park,
Livingston, EH54 9BU
T: +44 (0) 1506 467 477
E: boss.sales@allegion.com

ISSUE DATE: January 2026

ALLEGION
bossdoorcontrols.com

boss door controls

GENERAL MAINTENANCE

Door controls

Allegion has identified that many problems associated with overhead door closers can be attributed directly to errors in installation rather than problems with the door closer itself. If the door is not closing properly into the frame you should first disconnect the door closer (disconnect the arm(s)) and determine that there is not an underlying problem with the door, frame or any smoke /draft seals that might be fitted.

PLEASE NOTE:

The power of the door closer should not be used to overcome problems associated with the door or other items of hardware fitted to it. Under no circumstances should the closer body be dismantled.

Types of maintenance

Much of the routine maintenance recommended consists of a combination of visual and mechanical checks, cleaning and lubrication. Look out for the icons opposite which provide a 'quick glance' reminder of the maintenance required.

Visual checks

Primarily making a visual check on the product and surrounding door/frame looking for wear, damage, and general condition.



Functional checks

Consists of checking that the product operates properly ensuring the door can fully close without any binding or undue force required. Check that any seals or weatherstripping do not inhibit correct operation of the door.



Check fixings

Fixings need to be checked regularly and tightened when necessary. Check that no projection of fixings prevents the door from swinging freely.



Lubricating

Some products will benefit from periodic lubrication using a light machine oil or as instructed.



Cleaning

Build up of grease, dust and harmful chemicals should be removed to prevent corrosion and maintain the product finish.



Boss Door Controls
3 & 4 Rutherford Square, Brucefield Industry Park,
Livingston, EH54 9BU
T: +44 (0) 1506 467 477
E: boss.sales@allegion.com

ALLEGION

bossdoorcontrols.com

ISSUE DATE: January 2026

boss door controls

CLOSER MAINTENANCE

WEEKLY CHECKS



Release the door from the fully open position and ensure that it closes fully into the frame. Ensure the latch (if fitted) engages fully into the strike plate. Repeat the process a few times from different angles of opening to ensure the door closes consistently each time.



Check and adjust the closing and latching speeds if necessary.

Check that the door or hardware does not come into contact with the door frame or the surrounding structure.

QUARTERLY CHECKS



- The fixings of the closer body and the bracket are subject to stress and should be checked carefully to make sure they are tight.



- Periodically apply a little light machine oil to the moving joints of the arm and bracket.



- Check any fire and smoke seals to ensure they do not foul the action of the door.



- Check for any loss of fluid from the door closer body which would indicate a failing device.

- Clean the closer body, arms and bracket if necessary.

FIRE DOOR APPLICATIONS

When installed as part of a fire precaution system the door closing mechanism, including the door selector if used on a double door arrangement, should be checked in accordance with standing periodic fire testing procedures.

Routinely check that all fixings of the closer body and bracket are tight.

Routine care of finishes as necessary.

Boss Door Controls
3 & 4 Rutherford Square, Brucefield Industry Park,
Livingston, EH54 9BU
T: +44 (0) 1506 467 477
E: boss.sales@allegion.com

ISSUE DATE: January 2026

ALLEGION

bossdoorcontrols.com

boss door controls

ELECTROMAGNETIC HOLD-OPEN MAINTENANCE

In situations where a fire door in a high traffic area is fitted with a door closer an electromagnetic hold-open device may be fitted which allows the door to be held open or allowed to swing free during normal use.

However, in the event of a fire, the electromagnetic hold-open device will be deactivated allowing the door to close under the action of the door closer.

- The system is powered by a 24v supply which is normally located close to the door either in the ceiling void or convenient cupboard
- The system must be connected to a separate smoke detection system and/or the building's fire alarm system

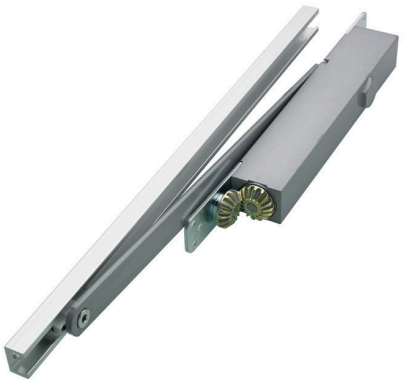



WEEKLY CHECKS

It is vitally important that the integrity of a fire door is maintained in the event of a fire. All electromagnetic hold-open devices and the ancillary equipment, including the transformer/ rectifier (power supply) must be tested weekly in accordance with the procedures set out in the fire precautions regulations.

It is recommended that the following procedure be followed:

- With the door in the hold-open position simulate the fire alarm activation and check that the door is released immediately and closes fully into the frame, fully engaging the latch if fitted. The fire alarm may be simulated in a number of ways including activation of a break glass unit or by a built-in test switch on the hold-open device.
- With the door in the hold-open position switch off the power to the hold-open devices to simulate power failure. The door should be released and close fully as above.
- With the door in the hold-open position check that the door can be pulled manually off the hold-open and close fully into the frame.

ANY FAILURE OF THE DOOR TO CLOSE MUST BE RECTIFIED IMMEDIATELY

Firstly check that the failure is due to the electromagnetic device failing to release or whether the closing mechanism failed to close the door properly for some reason.

Electronic failure should be checked by a qualified technician to determine the fault.

if the closer fails to close the door properly please refer to the Door Closer section of our 'Service and Maintenance Guide' for further information.

Boss Door Controls
3 & 4 Rutherford Square, Brucefield Industry Park,
Livingston, EH54 9BU
T: +44 (0) 1506 467 477
E: boss.sales@allegion.com

ISSUE DATE: January 2026

ALLEGION

bossdoorcontrols.com