
3
months
mois
monate
mesi
meses
maanden
ay

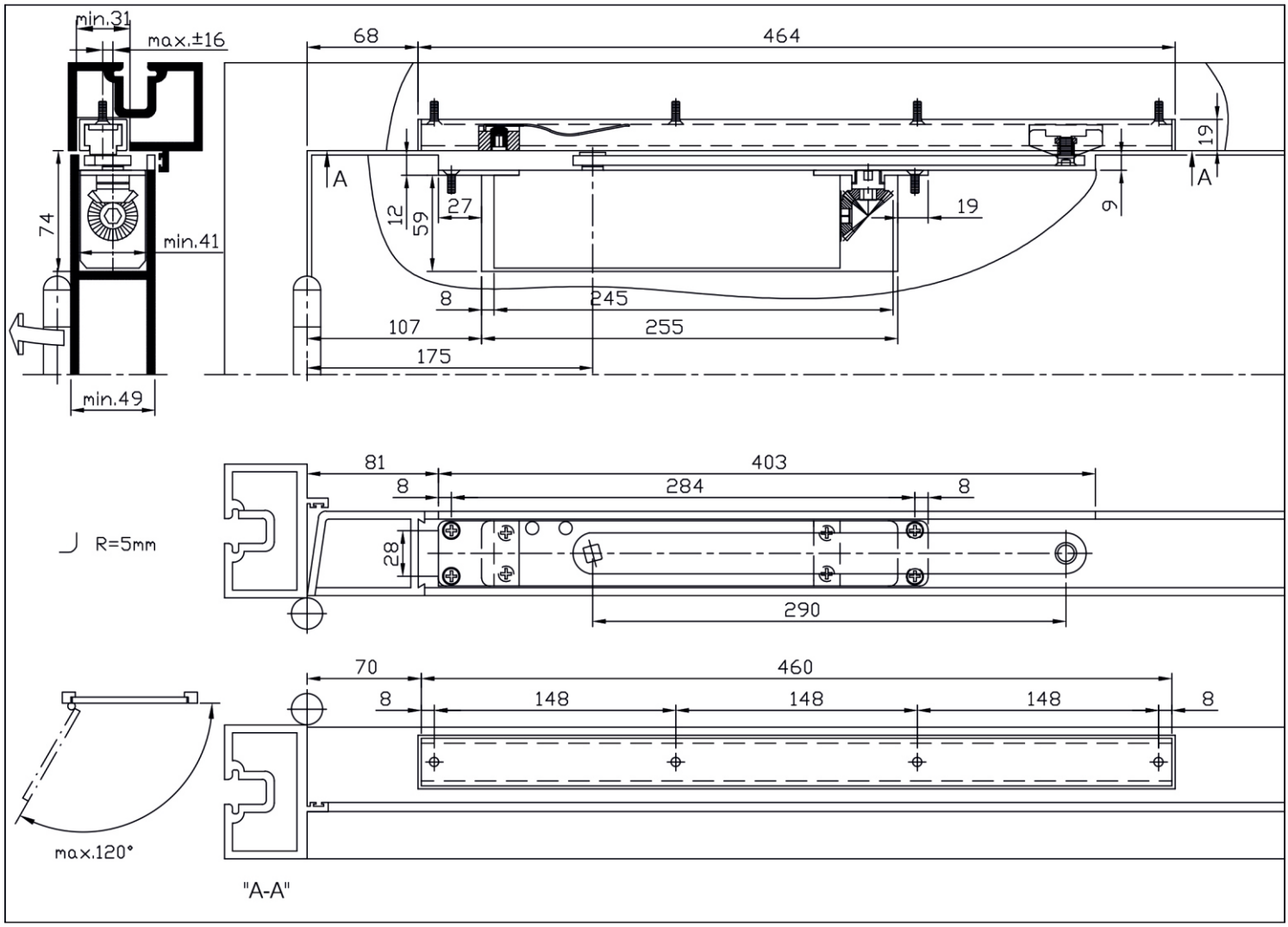
min.31
max.±16
68
464
19
A
A
74
min.41
12
59
27
19
9
8
245
107
255
175
min.49
81
403
8
284
8
R=5mm
28
290
70
460
8
148
148
148
8
max.120°
"A-A"

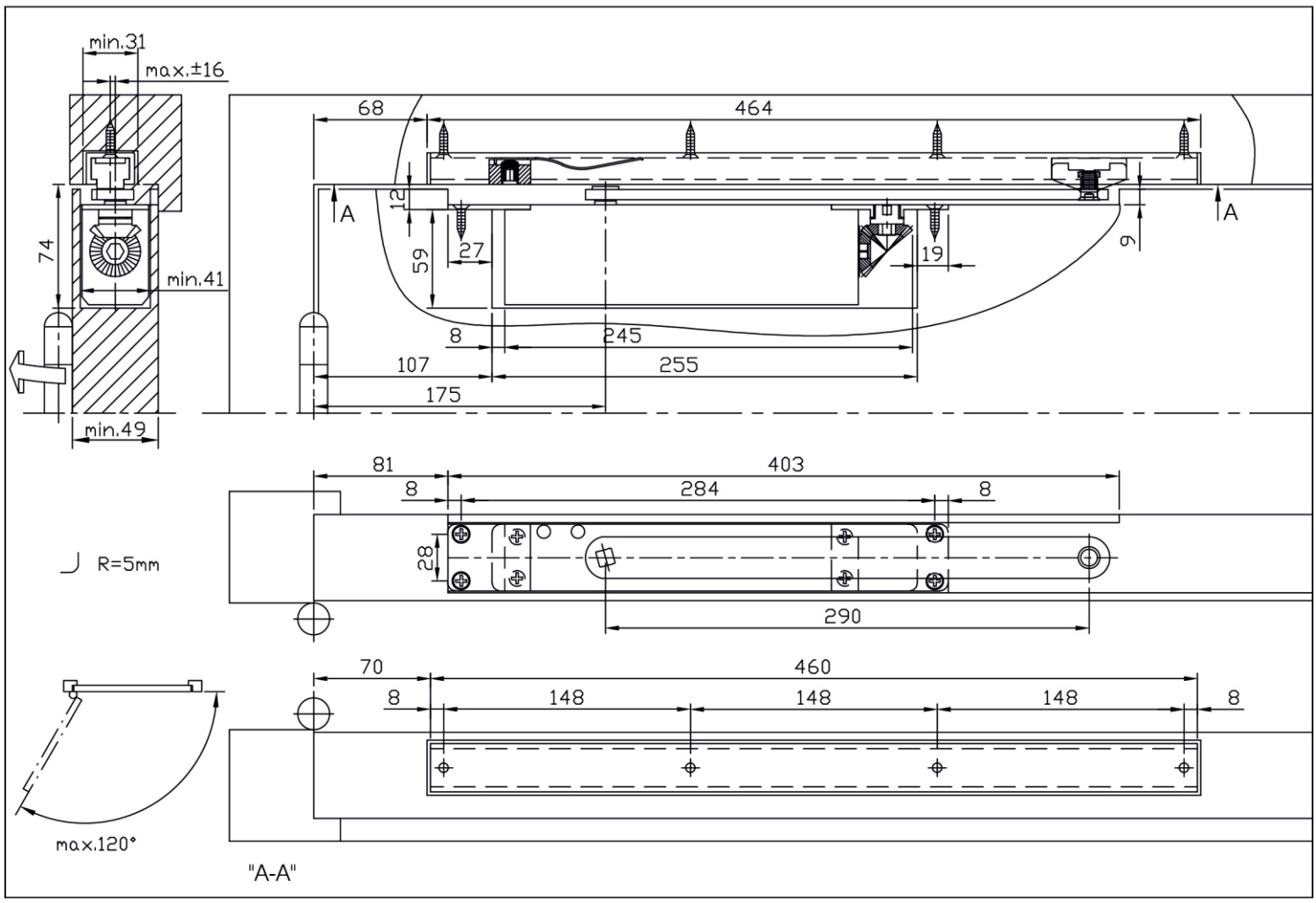
min.31
max.±16
68
464
A
A
12
59
27
19
9
74
min.41
8
245
107
255
175
min.49
81
403
8
284
8
R=5mm
28
290
70
460
8
148
148
148
8
max.120°
"A-A"

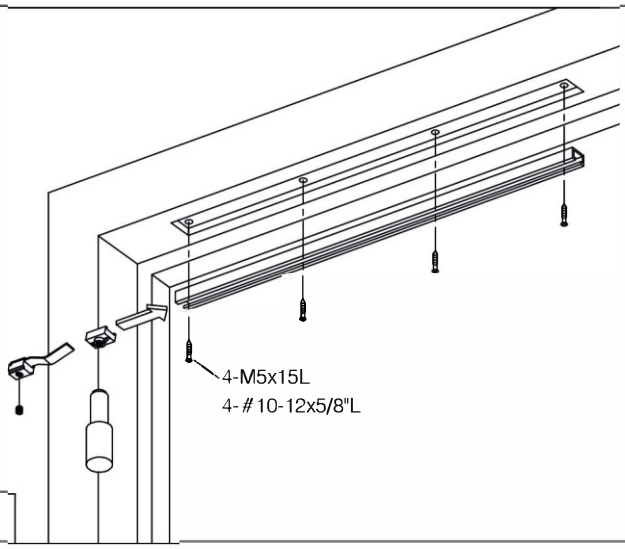

1

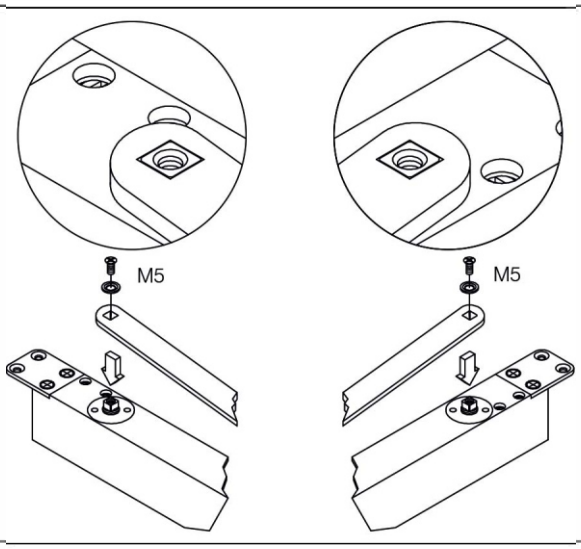

2

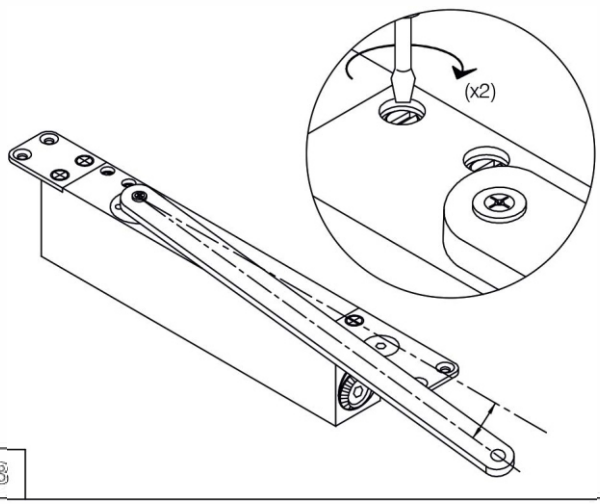

3

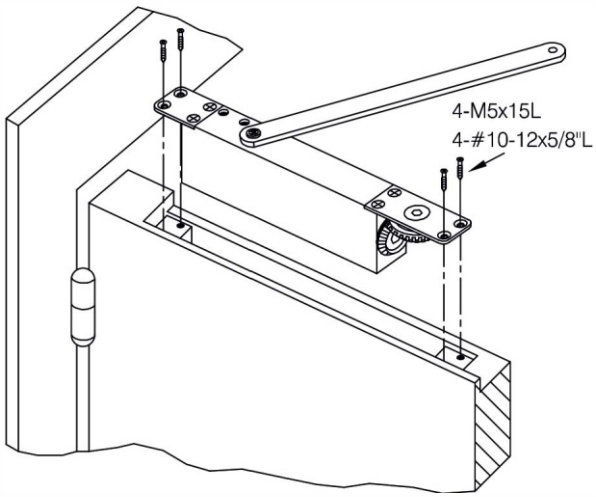

4

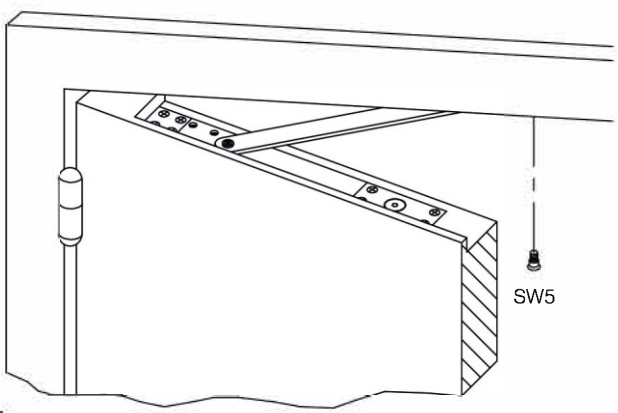

5

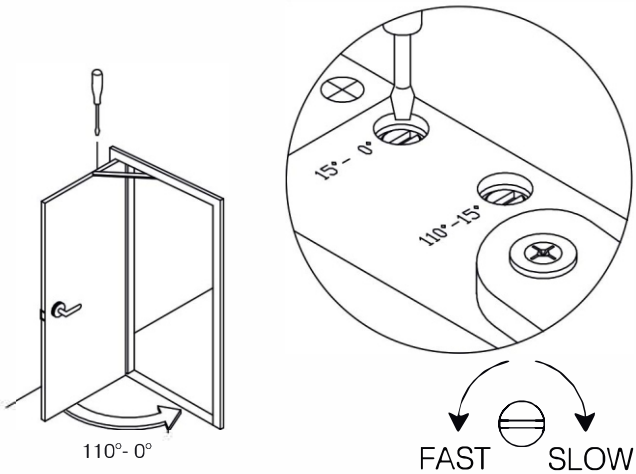

Closing speed adjustment

6

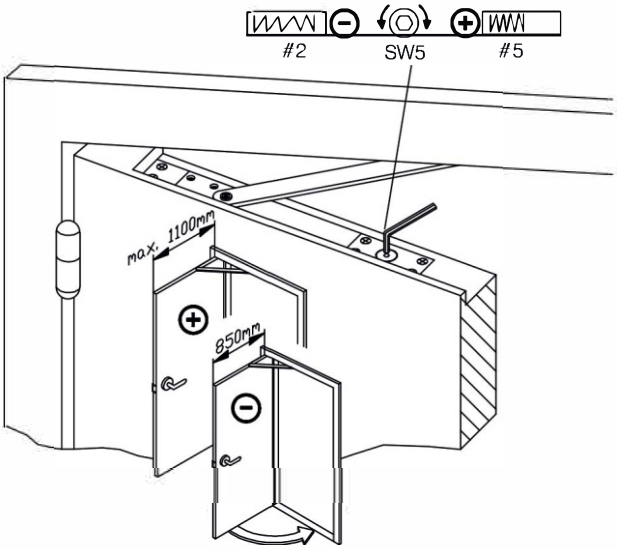

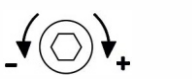

Power adjustment

2-5 MODEL		
NO.OF TURNS	DIRECTION	SIZE
3	CC	2
#0	–	3
4	C	4
7	C	5

#: FACTORY PRE-SET

7

CE 2812-CPR		Boss Door Controls Ltd 3-4 Rutherford Square Buncefield Industry Park Livingston EN54 9BU Scotland		ITS6.225 certifire CF6141					UKCA 1121-CPR		
AD8109	24	FIG 1 EN 1154:1996+A1:2002	3	8	2 5	1	1	3	AD - UK AD8017		22

certifire APPROVED PRODUCT CF6141

boss door controls