
3
months
mois
monate
mesi
meses
maanden
ay

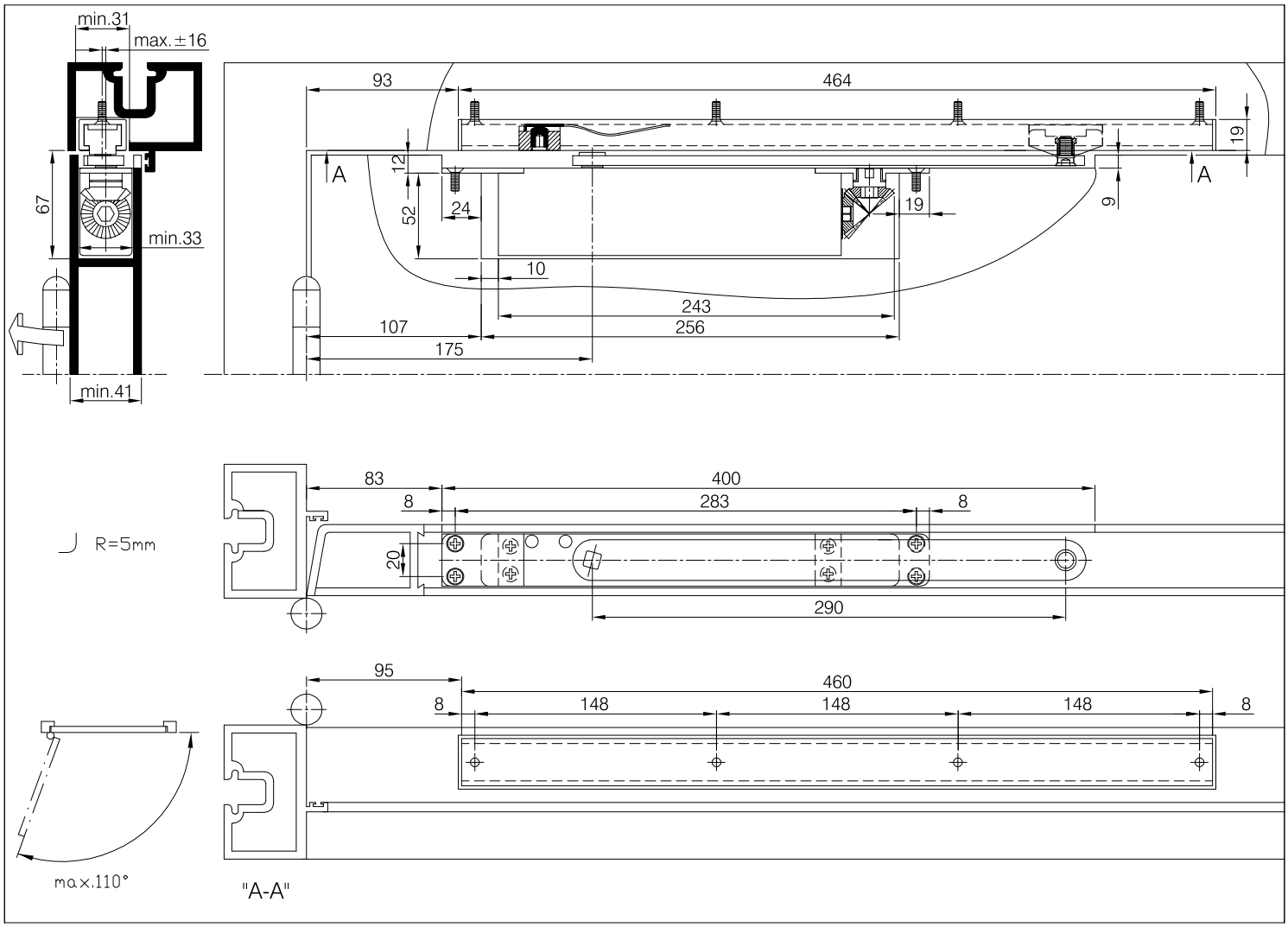
min.31
max.±16
67
min.33
min.41
93
464
19
A
12
52
24
19
9
10
243
107
256
175
83
400
8
283
8
20
290
R=5mm
95
460
148
148
148
max.110°
"A-A"

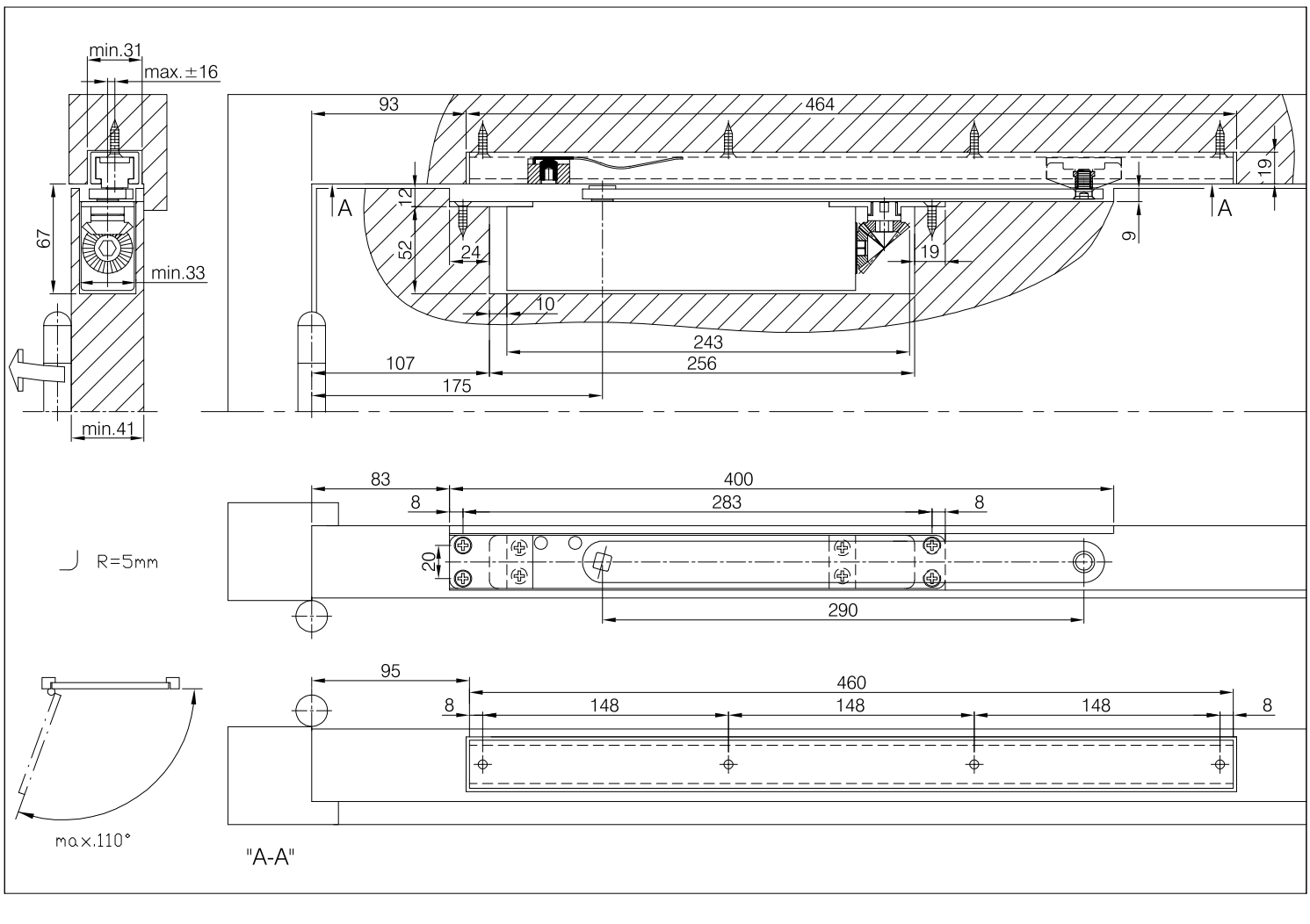
min.31
max.±16
67
min.33
min.41
93
464
19
A
12
52
24
19
9
10
243
107
256
175
83
400
8
283
8
20
290
R=5mm
95
460
148
148
148
max.110°
"A-A"

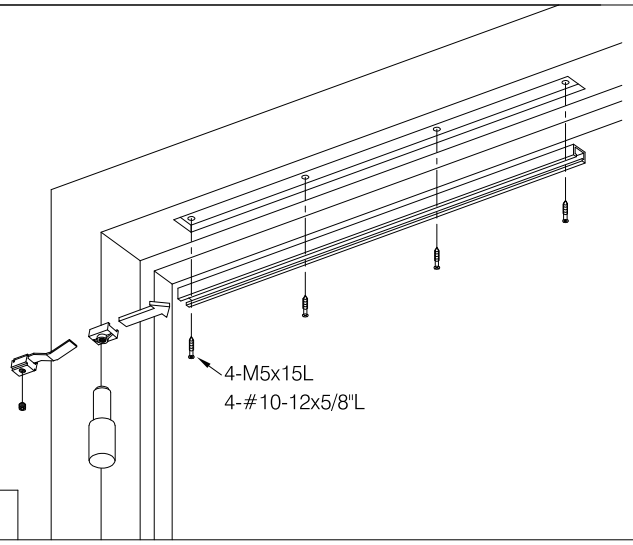

1

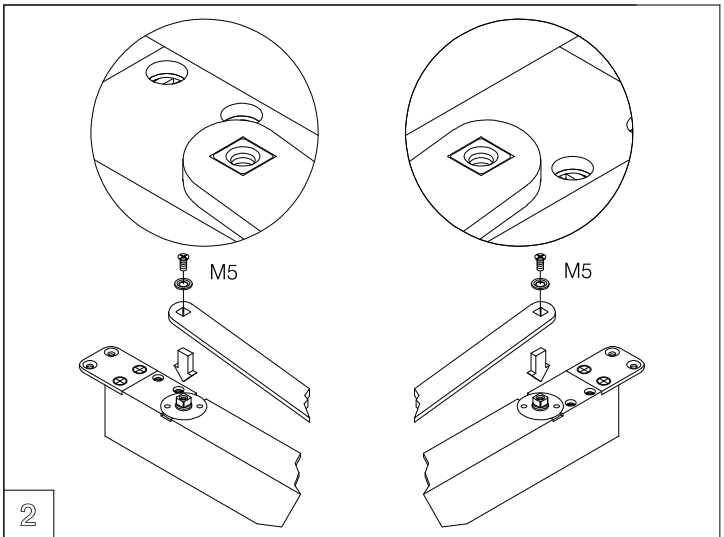

2

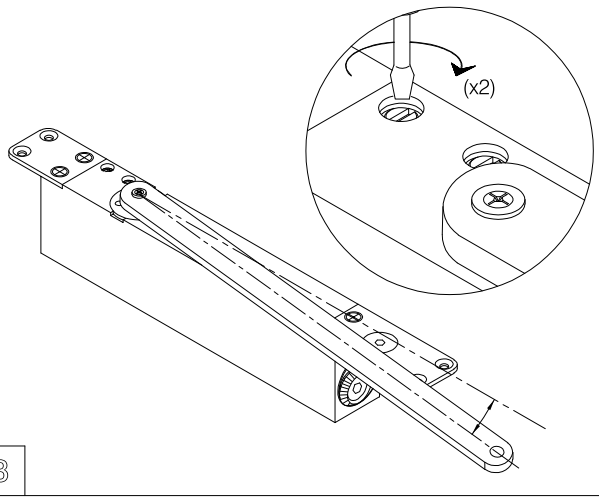

3

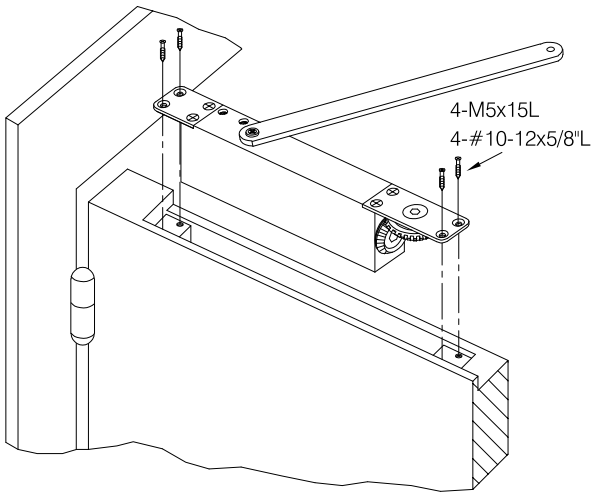

4

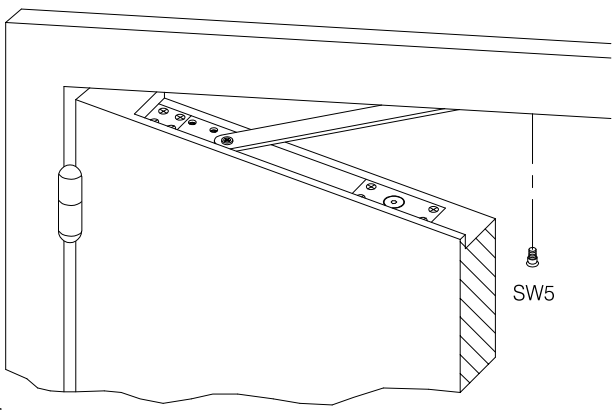

5

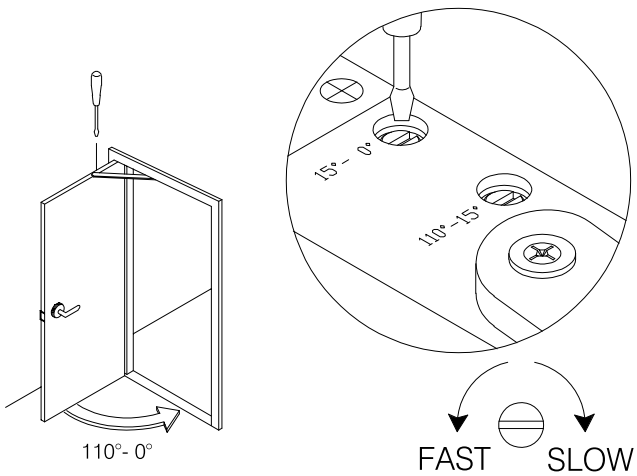

Closing speed adjustment

6

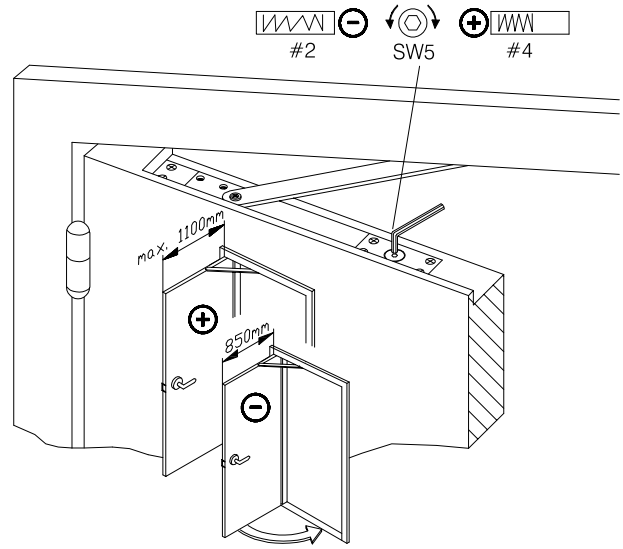

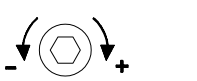

Power adjustment

2-4 MODEL		
NO. OF TURNS	DIRECTION	SIZE
3	-	2
0	*	3
2	+	4

* : FACTORY PRE-SET

7

A1

CE 2812-CPR		Boss Door Controls Ltd 3-4 Rutherford Square Buncefield Industry Park Livingston EN54 9BU Scotland		ITS6.224 certifire				CF 6141	UK CA 1121-CPR		
AD8073	23	EN 1154:1996+A1:2002	3	8	2/4	1	1	3	AD - UK AD8026		22

APPROVED PRODUCT
CF6141